International Civil Aviation Organization

The Twenty-First Meeting of the APANPIRG ATM/AIS/SAR Sub-Group (ATM/AIS/SAR/SG/21)

Bangkok, Thailand, 27 June – 01 July 2011

Agenda Item 6: Provision of ATM/AIS/SAR in the Asia/Pacific Region, including associated CNS matters

STATUS OF HARMONIZATION OF THE INTERFACE CONTROL DOCUMENT FOR THE NORTH ATLANTIC AND ASIA/PACIFIC REGIONS (PAN ICD)

(Presented by the United States of America)

SUMMARY

This paper presents the status on the process to consolidate the Interface Control Document (ICD) for the North Atlantic and Asia/Pacific (APAC) Regions, to provide for harmonized Air Traffic Service Inter-facility Data Communications (AIDC).

This paper relates to –

Strategic Objectives:

A: ***Safety*** *– Enhance global civil aviation safety*

C: ***Environmental Protection and Sustainable Development of Air Transport*** *– Foster harmonized and economically viable development of international civil aviation that does not unduly harm the environment*

Global Plan Initiatives:

GPI-6 Air traffic flow management
GPI-12 Functional integration of ground systems with airborne systems
GPI-22 Communication infrastructure

1. INTRODUCTION

1.1. At the forty-sixth meeting of the NAT Systems Planning Group (NAT SPG/46), the group was presented with the follow up actions undertaken by the NAT IMG in response to NAT SPG Conclusion 45/25 c) whereby the NAT IMG was tasked to direct its contributory groups to assist in the development of a harmonised multi-regional AIDC ICD.

1.2. In this regard the NAT SPG agreed that the task of harmonising the NAT and APAC AIDC ICDs should be advanced in accordance with the following principles:

a) The United States should continue the effort by drafting a consolidated ICD with thorough bi-directional tracking of content;

b) Since the ICD would apply to oceanic regions only, a title of the future document should be "Pan Regional ICD for Oceanic AIDC";

c) The content of the initial consolidated ICD should be confined to the existing substance of the NAT and APAC ICDs; otherwise review would be unnecessarily complicated;

d) The above should be accomplished as quickly as practicable, and the NAT and APAC ICDs should be frozen in the interim; and,

e) Once the NAT and APAC Planning and Implementation Regional Groups (PIRGs) have endorsed the resulting ICD, a new round of drafting and review could begin, to incorporate any desired new substance, as part of the ongoing inter-regional maintenance of the document.

1.3. The NAT SPG also agreed that this work would be progressed in the framework of the NAT IMG and that a group of experts would be identified to review the draft consolidated NAT/APAC AIDC ICD. The Rapporteur of the NAT CNSG would coordinate this activity with the APAC Region. The work would be conducted via electronic means of communication as much as possible. A progress report would be provided to the next meeting of the NAT IMG where a decision would be taken regarding further steps.

1.4. Utilizing the existing draft *Global Interface Control Document (ICD) for ATS Interfacility Data Communications (AIDC)*, the United States reformatted the document to reflect the NAT SPG suggestions. A copy of the coordination draft *Pan Regional Interface Control Document for ATS Interfacility Data Communications (PAN ICD),* v 0.4, is at **Attachment A**. A copy of the comment resolution form is at **Attachment B**. It should be noted that as this effort has been ongoing, the North Atlantic Common Coordination Interface Control Document, v1.2.8, was published December, 2010. All information in the current draft coordination copy of the PAN ICD is from NAT CC ICD, v1.2.7, May, 2009.

2. DISCUSSION

2.1 At the fourth meeting of the NAT Communication, Navigation and Surveillance Group (NAT CNSG/4), from 7-11 March 2011, the Group was presented with the status of work on harmonisation of the NAT and APAC AIDC ICDs into a Pan-regional ICD for Oceanic AIDC. The Group noted that in line with the NAT SPG task, the United States has produced a consolidated draft ICD version 0.4 with thorough bi-directional tracking of content.

2.2 The Group agreed that in order to further advance this work, the NAT service providers would provide by 25 March 2011, the names and contact information of their experts to the CNSG Rapporteur and Secretary. These experts would start reviewing the document and provide a report to the next meeting, including comments on the methodology, structure and suitability of the proposed document. The NAT CNSG/5 will be conducted 26 to 30 September 2011 in Bodo, Norway.

3. CONCLUSION

3.1 The meeting is invited to note the information presented in this paper.

Pan Regional Interface Control Document for Oceanic ATS Interfacility Data Communications (PAN ICD)

Coordination Draft
Version 0.4 —

Sponsored by the North Atlantic Systems Planning Group (NAT SPG) and
Asia/Pacific Air Navigation Planning and Implementation Regional Group (APANPIRG)

Amendments to the PAN ICD

The following table will be used to track updates to the PAN ICD by the Ad Hoc Working Group. This document contains procedures material from the *Asia/Pacific Regional ICD for AIDC* and the *North Atlantic Common Coordination ICD*. The working method was to port material from both documents with differences between the two original documents highlighted as follows:

Procedures material from the Asia/Pacific Regional ICD for AIDC is highlighted in green.

Procedures material from the North Atlantic Common Coordination ICD is highlighted in blue.

Procedures material contained in both the NAT ICD and APAC ICD is not highlighted.

Amendment	Source	Subject(s)	Date
0.1		Not used	
0.2	Pre-PAN ICD	Annotated outline incorporated into document structure	May 2010
0.3	PAN ICD	The draft document at this stage is focused on populating the outline with relevant material. Document style, formatting, and presentation of material are still to be considered.	20-Oct-10

AMENDMENTS

The issue of amendments is announced by the ICAO Regional Offices concerned, which holders of this publication should consult. The space below is provided to keep a record of such amendments.

RECORD OF AMENDMENTS AND CORRIGENDA

No.	Date Applicable	Date Entered	Entered By	Description of Change

Table of Contents

Page

List of Tables

List of Figures

Appendices

FOREWORD.

1. Historical background

1.1 The *Pan Regional Interface Control Document* (PAN ICD) for Oceanic ATS Interfacility Data Communications (AIDC) is the result of the progressive evolution of the *Asia/Pacific Regional ICD for AIDC*, issued by the ICAO Asia/Pacific Regional Office on behalf of the Asia Pacific Air Navigation Planning and Implementation Regional Group (APANPIRG), and the *North Atlantic Common Coordination ICD*, published by the ICAO European and North Atlantic Office, on behalf of the North Atlantic Systems Planning Group (NAT SPG).

1.2 Each of the two founding documents provided guidance on a regional basis. However, in recognition of the need to provide globally harmonized guidance, the PAN ICD became effective on [date].

1.3 This edition provides for a consolidation of the founding documents which includes material from each of the regional documents taking into account lessons learned, global implications and guidance on more recent initiatives.

2. Scope

2.1 This document specifies the facilities and messages to be used within the Asia/Pacific (APAC) and North Atlantic (NAT) regions for the exchange notification, coordination, transfer and related data between automated air traffic service (ATS) systems.

2.2 The messages defined in this document are used during the various stages of the flight. Though outside the scope of the AIDC application, the Emergency Flight Planning and Supplementary Message Categories as defined in ICAO Doc 4444 Appendix 3 will continue to be used to perform functions not provided by the AIDC application.

2.3 In particular, the Flight Planning function is required and will be required in the future to support operations within the APAC and NAT Regions. The ICAO messages FPL (Filed Flight Plan), CHG (Modification), DLA (Delay), DEP (Departure), ARR (Arrival), CNL (Cancel) and RQP (Request Flight Plan) will be used to support this function.

2.4 There is a great need for a communications and data interchange infrastructure to significantly reduce the need for verbal coordination between Oceanic Area Control Centres. AIDC standards, as defined in this document, provide a harmonised means for data interchange between ATS units during the notification, coordination, and transfer of control phases of operations.

2.5 The message sets and procedures described in the ICD have been designed for use with the existing Aeronautical Fixed Telecommunications Network (AFTN) and the future Aeronautical Telecommunication Network (ATN). In the interest of global standardisation, ICAO agreed methods and messages were used wherever possible. Where ICAO methods and messages do not meet requirements, new messages were identified using existing ICAO field definitions to the extent possible. Specifically, the ICD defines the following:

a) Basic communications and support required to coordinate implementation of AIDC throughout the APAC and NAT Regions; Basic communications and support mechanisms required to underpin the coordinated implementation of on-line data interchange throughout the NAT and APAC Regions;

b) Common boundary agreements between all the area/oceanic control centres concerned;

c) Implementation guidance material;

d) NAT/EUR ATS interface messages; and,

e) Relationship to the ICAO OPLINKP (formerly the ADS Panel) AIDC message set. Relationship to the ICAO ADS Panel AIDC message set.

2.6 The ICD also describes a configuration management process which will ensure stability in the design and implementation of the messages described herein. As agreed, this process is applicable and adopted by APAC and NAT Provider States along with the ICD guidance material. Finally, in order to ensure stability in the design and implementation of the messages listed herein, a configuration management process has been agreed to which is applicable to all NAT and APAC Provider States.

3. Document amendment

3.1 This ICD is under configuration control and is administered by the ICAO European and NAT Regional Office and the ICAO APAC Regional Office.

3.2 Changes to the document shall only be made as a result of agreement by all States in the Region. The ICAO regional office will coordinate the change proposal within its own region, other regions, and ICAO HQ, to determine the acceptability of the change proposal. Once the ICAO regional office has completed coordination and the participating PIRGs accept the change proposal, the change is concluded by each of the PIRGs.

Amendments to the PAN ICD

Amendment	Source(s)	Subject(s)	Approved applicable
1st Edition ([date])	Asia/Pacific Air Navigation Planning and Implementation Regional Group (APANPIRG/ – [year]) North Atlantic Systems Planning Group (NAT SPG/ – [year])	*Pan Regional ICD* (PAN ICD)	Applicable within participating Regions on [date].

Chapter 1. List of Acronyms

When the following acronyms are used in the present document they have the following meanings.

Acronym

ABI. Advance Boundary Information (AIDC message)

ACARS. Aircraft Communication Addressing and Reporting System.

ACC. Area Control Centre

ACI. Area of Common Interest

ACP. Acceptance (AIDC message)

ADS. Automatic Dependent Surveillance

ADS-B. Automatic Dependent Surveillance – Broadcast

ADS-C. Automatic Dependent Surveillance – Contract

AFN. ATS Facilities Notification

AFTN. Aeronautical Fixed Telecommunications Network

AIDC. ATS Inter facility Data Communications

AOC. Airline Operational Control (also stands for Assumption of Control)

AMHS. ATS Message Handling System

APANPIRG. Asia Pacific Air Navigation Planning and Implementation Regional Group

ARINC. Aeronautical Radio Inc.

ARTCC. Air Route Traffic Control Center

ASIA/PAC. Asia/Pacific

ASM. Application Status Monitor (AIDC message)

ATC. Air Traffic Control

ATFM. Air Traffic Flow Management

ATSC. Air Traffic Service Center

ATM. Air Traffic Management

Acronym

ATMOC. Air Traffic Management Operations Center

ATN. Aeronautical Telecommunications Network

ATS. Air Traffic Services

ATSU. Air Traffic Service Unit

CADAG. Communications, Automation, and Data Link Applications Group

COMAG. Communications and Automation Group

C-ATSU. Controlling ATSU

CDN. Coordination (AIDC message)

CHG. ICAO Modification Message

CPDLC. Controller Pilot Data Link Communications

CPL. Current Flight Plan (AIDC message)

CRC. Cyclic Redundancy Check

D-ATSU. Downstream ATSU

DIA. Coordination Dialogue

EMG. Emergency (AIDC message)

EST. Coordination Estimate (AIDC message)

ETX. End of Text

FAN. FANS Application Message (AIDC message)

FANS. (also FANS-1/A) Future Air Navigation System

FCN. FANS Completion Notification (AIDC message)

FCO. Facilities Notification Contact

FDPS. Flight Data Processing System

FI. Flight Identifier

FIC. Flight Information Centre

Acronym

FIR. Flight Identification Region

FMC. Flight Management Computer

FMD. Flight Management Computer (Selected)

FMH. Facilities Notification Message Header

FML. Flight Management Computer (Left)

FMR. Flight Management Computer (Right)

FN CAD. Contact Advisory

FPL. Filed Flight Plan

FPPS. Flight Plan Processing System

FPO. Facilities Notification Current Position

GOLD. Global Operational Data Link Document

IA-5. International Alphabet 5

ICAO. International Civil Aviation Organization

ICD. Interface Control Document

IGM. Implementation Guidance Material

IMI. Imbedded Message Identifier

LAM. Logical Acknowledgement Message (AIDC message)

LOA. Letter of Agreement

LRM. Logical Rejection Message (AIDC message)

MAC. Coordination Cancellation (AIDC message)

MIS. Miscellaneous (AIDC message)

MLF. Master List of Fixes

MTI. Message Type Identifier

NAT. North Atlantic

Acronym

NAT SPG. North Atlantic Systems Planning Group

NAT ID. North Atlantic Implementation Document

NDA. Next Data Authority (CPDLC message); or Next Data Authority (Next unit that will communicate with the aircraft using CPDLC)

OAC. Oceanic Area Control Centre

OCS. Oceanic Control System

ODF. Optional Data Field

OLDI. On-Line Data Interchange

OPLINKP. Operational Data Link Panel

OSI. Open System Inter-connection

PAC. Pre-activation (AIDC message)

PANS-ATM. Procedures for Air Navigation Services – Air Traffic Management

REJ. Rejection (AIDC message)

R-ATSU. Receiving ATSU

RNP. Required Navigation Performance

SARPs. Standards and Recommended Practices

SITA. Societe Internationale de Telecommunciations Aeronautiques

SMI. Standard Message Identifier

SOH. Start of Header

SOTA. Shannon Oceanic Transition Area

STX. Start of Text

TCP. Transfer of Control Point

TDM. Track Definition Message (AIDC message)

TEI. Text Element Identifier

Acronym

TOC. Transfer of Control (AIDC message)

TRU. Track Update (AIDC message)

UTC. Universal Coordinated Time

VSP. Variable System Parameter

WGS/84. World Geodetic System 1984

Chapter 2. Purpose, Policy and Units of Measurement

2.1 Purpose

2.11 The purpose of the ICD is to ensure that data interchange between units equipped with automated ATS systems used for air traffic management (ATM) is to a common base standard, and that the evolutionary development is coordinated and implemented through the APANPIRG and the NAT SPG. Therefore, the PAN ICD was developed to preserve the common base standard set out in the Automatic Dependent Surveillance (ADS) Panel Guidance Material, while allowing for regional differences as required. It also provides a description of the message types and methods of communication.

2.12 In the context of this document, the definition of AIDC is as follows:

2.12.1 The AIDC application supports information exchanges between ATC application processes within automated ATS systems located at different ATSUs. This application supports the Notification, Coordination, and the Transfer of Communications and Control functions between these ATSUs.

2.12.2 In the interest of global standardization, ICAO agreed methods and messages are used wherever possible. Where ICAO methods and messages do not meet requirements, new messages were identified using existing ICAO field definitions to the extent possible.

2.13 In the context of this document, the definition of OLDI is as follows:

2.13.1 The reception and transmission of ATS data and messages required to ensure the integrity of FDPS/FPPS data bases.

2.14 This document specifies the facilities and messages to be used for the exchange of notificiation, coordination, transfer and related data between automated ATS systems.

2.15 The messages defined in this document are used during the active phase of flight. Though outside the scope of the AIDC application, the Emergency, Flight Planning and Supplementary Message Categories as defined in ICAO *Procedures for Air Navigation Services – Air Traffic Management* (PANS-ATM) Appendix 3 will continue to be used to perform functions not provided by the AIDC application.

2.16 In particular, the Flight Planning function is required and will be required in the future to support operations. The ICAO messages FPL (Filed Flight Plan), CHG (Modification), DLA (Delay), DEP (Departure), ARR (Arrival), CNL (Cancel) and RQP (Request Flight Plan) will be used to support this function.

2.2 Policy

2.21 The application of AIDC and OLDI shall be based on a step-by-step data distribution scheme comprising three (3) phases: NOTIFICATION, COORDINATION and TRANSFER OF CONTROL. In support of all the operational phases, application management messages are required to support application level dialogue between automated ATS systems.

2.21.1 The Advance Boundary Information (ABI) message shall normally be used for notification, subject to bi-lateral agreement.

2.21.2 For the coordination phase, The Current Flight Plan (CPL) message shall act as the initial cleared profile coordination message and the Coordination (CDN) message shall be used to negotiate changes. Coordination dialogues must be terminated using an Accept (ACP) or a Reject (REJ) message.

2.21.3 Automated Transfer of Control (TOC) and Acceptance of Control (AOC) procedures shall be supported.

2.22 The capability to revert to verbal coordination and manual transfer of control shall be retained.

2.23 Flight plans shall continue to be filed in accordance with existing procedures. Finally, it is understood that operators shall continue to file flight plans in accordance with existing procedures and they shall make every effort to ensure that flight plans are disseminated to all the correct addresses.

2.3 Units of measurement

2.31 In general the AIDC ICD messages support different units of measurement. Bilateral agreements should determine the units to be transmitted.

2.32 Time and date.

2.32.1 All times shall be expressed in UTC as four digits rounded to the nearest whole minute, with midnight expressed as 0000. Subject to bilateral agreement, time can be expressed in 6 digits as hours, minutes and seconds. Dates, when used, shall be in the form of YYMMDD.

2.33 Geographic position information.

2.33.1 Geographic position information shall be in accordance with the provisions contained in the *Procedures for Air Navigation Services Air Traffic Management (PANS-ATM, Doc 4444)*.

2.34 Level and speed information.

2.34.1 All level information shall be specified as flight level(s) or altitude(s) expressed in hundreds of feet. Speed information shall be expressed as true airspeed in knots or as a Mach number. Level and speed information shall be specified in accordance with ICAO PANS-ATM Doc 4444 with the following exceptions applying only to Field 14 or the Track Data field in a TRU message.

2.34.1.1 When including more than one of the optional formats described below in the same AIDC message, the order that the data is incorporated into Field 14 is the order that it is described below. For example, if an AIDC message was to include a block level and an assigned Mach Number, the block level information would precede the Mach Number information.

2.34.2 Block level information

2.34.2.1 In certain circumstances, a vertical range of levels may be transmitted. Where a vertical range of levels is used, it shall be specified as a lower level followed by the upper level.

Example

MINNY/2125F320F340
The aircraft is operating in a block of levels between F320 and F340 (inclusive).

2.34.2.2 When transmitting a level restriction, only a single level may be included within the restriction.

Example

ELMER/0244F310F350F290A

The aircraft is cleared to operate in a block of levels between F310 and F350 and will cross ELMER at or above F290.

2.34.2.3 The coordination of a vertical range of levels by AIDC should only be made following bilateral agreement.

2.34.3 Mach Number Technique Information

2.34.3.1 The boundary estimate may contain additional clearance information describing a Mach Number that has been assigned to an aircraft. If transmitted, the Mach Number information shall always follow directly after the level information and be separated from the level information by a forward slash delimiter (/). This information shall contain:

2.34.3.1.1 A single character providing advice as to whether an aircraft will be maintaining the notified Mach Number or less (L), the notified Mach Number or greater (G), or exactly the notified Mach Number (E); and

2.34.3.1.2 Four characters defining the notified Mach Number, expressed as the letter M followed by 3 numerics.

Example

BUGGS/0349F350F370/GM085
The aircraft is operating in a block of levels between F350 and F370 (inclusive) maintaining M0.85 or greater.

PLUTO/0215F310/EM076
The aircraft is maintaining M0.76

2.34.3.2 The absence of speed information in the boundary estimate data of an AIDC message indicates that the previously assigned speed has been cancelled.

Example

SPEDY/1237F310F330B/LM083
The aircraft is cleared to F310 and will cross SPEDY at or below F330, maintaining M0.83 or less; subsequently followed by:

SPEDY/1238F310
The aircraft will no longer be on descent at SPEDY, and has resumed normal speed (and one minute later than previously coordinated)

2.34.3.3 The format described for the notification and coordination of Mach Number in this section applies to Field 14 – boundary estimate data – only. It may be transmitted in any AIDC message containing Field 14.

2.34.3.4 The coordination of Mach Numbers by AIDC should only be made following bilateral agreement.

2.35 Offset and Weather Deviation Information

2.35.1 Where bilaterally agreed, the boundary estimate may contain additional clearance information describing an offset or weather deviation that has been issued to an aircraft. If transmitted, the offset and weather deviation information shall always be the last information in the group and shall be separated from preceding information by a forward slash delimiter (/). This information shall contain:

2.35.1.1 A single character providing advice as to whether the clearance is an offset (O) or a indicating the weather deviation (W); and,

2.35.1.2 One to three characters indicating an off track distance associated with this clearance (leading zeros shall not be used); a single character indicating the weather deviation (W), and,

2.35.1.3 A direction, indicating left (L), right (R) or either side of track (E).

Example

GOOFY/2330F310/GM084/O30R
The aircraft is offsetting 30NM right of track, maintaining M0.84 or greater.

DAFFY/0215F310F350/W25E
The aircraft is operating in a block of levels between F310 and F350 (inclusive) deviating up to 25NM either side of track.

DAFFY/0215F310F350/W5E The aircraft is operating in a block of levels between F310 and F350 (inclusive) deviating up to 5NM either side of track.

DAFFY/0215F310F350/W100E The aircraft is operating in a block of levels between F310 and F350 (inclusive) deviating up to 100NM either side of track.

41N040W/0215F310/W25E
The aircraft is maintaining F310 deviating up to 25NM either side of track.
The absence of weather deviation data in the boundary estimate data of an AIDC message indicates that the deviation clearance no longer applies.

34N040W/1519F330/W15R
The aircraft is deviating up to 15NM right of track, subsequently followed by:

34N040W/1520F330
The aircraft is back on track (and one minute later than previously coordinated).
The deviation clearance format described in this section applies to Field 14 – boundary estimate data –only. It may be transmitted in any AIDC message containing Field 14.

2.35.2 The absence of offset or weather deviation data in the boundary estimate data of an AIDC message indicates that the off track clearance no longer applies.

Example

MICKY/1519F330/W15R
The aircraft is deviating up to 15NM right of track subsequently followed by:

MICKY/1520F330
The aircraft is back on track (and one minute later than previously coordinated).

2.35.3 The off-track clearance format described in this section applies only to Field 14 – boundary estimate data – or the Track Data field in a TRU message. It may be transmitted in a TRU message or any AIDC message containing Field 14.

2.35.4 When an aircraft is offsetting or deviating, the coordination point shall be the coordination point based on the nominal route rather than the offset route.

2.35.5 When transmitting an AIDC message containing Offset information, the direction “E” (either side of track) shall not be used.

2.35.6 Valid "off track" distance values are integers between 1 and 250, with no leading zeros. The off track distance is measured in nautical miles (NM).

2.35.7 The coordination of offsets and weather deviations by AIDC should only be made following bilateral agreement.

2.36 Functional addresses.

2.36.1 A functional address, which refers to a function within an OAC/ACC (e.g. an ATC watch supervisor), may be substituted in certain messages in the MIS and EMG messages for the aircraft identification found in Field 7. Where such an address is used, it is preceded by an oblique stroke (/) to differentiate it from aircraft identification.

2.4 Restriction formats

2.41 Principles.

2.41.1 The restriction information provided by the controlling centre to the downstream centre shall be limited to the flight profile at and beyond the ACI boundary.

2.41.2 The cleared level, supplementary crossing data and crossing conditions in field 14 shall be based on the conditions at the ACI boundary.

2.41.3 If a fix other than a filed route point is used in the level and/or speed clearance at and beyond the ACI boundary, it shall be part of the appropriate flight profile in field 15.

2.42 Level and speed restrictions.

2.42.1 Use of restrictions is not mandatory. If they are used, the following convention shall be used.

2.42.2 Route, speed and level information contained in the Route field (ICAO ATS Field 15) represent the current cleared profile of the aircraft. Where a clearance requires a speed/level change subsequent to a route point, then the ICAO convention of route point followed by an oblique stroke and the new speed/level will be used:

Example

60N010W/M084F350

2.42.3 Where a clearance requires a speed/level change to be completed by a route point, then the items will be reversed:

Example

M084F350/62N020W

2.42.4 A combination of these two conventions will describe a clearance with a defined starting and completion point:

Example

60N010W/M084F350/62N020W

2.43 Time restrictions.

2.43.1 There are three types of time restrictions describing when an aircraft should arrive at a fix:

AT/ (UNTIL);

AT OR BEFORE; or,

AT OR LATER.

2.43.2 A suffix will be added to the four digit time to denote the restriction type, as follows:

AT: 'A', e.g. 1230A;

AT OR BEFORE: 'B', e.g., 1230B; or,

AT OR LATER: 'L', e.g., 1230L.

2.43.3 The restriction itself will begin with a slash (/), e.g., /1230B, and will appear after the fix with which it is associated. For example, 49N050W/1230L signifies that the aircraft should arrive at 49N 50W at or later than 1230 Z.

2.43.4 A time restriction may be used in conjunction with speed/level restrictions as follows:

60N010W/1230L/M084F350
After 60N010W cleared M084 FL350 and cross 60N010W at or later than 1230Z

M084F350/62N020W/1230A
Cleared M084 FL350 to be maintaining at or before 62N020W and cross 62N020W at time 1230Z

60N010W/M084F350/62N020W/1230B
After 60N010W cleared M084 FL350 to be maintaining at or before 62N020W.
Cross 62N020W at or before 1230Z

2.43.5 Time restrictions may only appear in the Route field (Field 15).

2.43.6 The use of time restrictions shall be bilaterally agreed between ATS providers.

2.44 Time restrictions related to level and speed.

2.44.1 There are three types of time restrictions, describing when an aircraft should commence or terminate a level and/or speed change. A suffix will be added to the four digit time to denote the restriction type, as follows:

UNTIL: ("A", e.g. 1230A)

AT or BEFORE: ("B", e.g., 1230B); or AT or

LATER: ("L", e.g., 1230L)

2.44.2 The restriction itself will begin with a slash, i.e., "/", e.g., /1230B, and will appear directly after the element with which it is associated. For example, M080F350/1230L signifies that the aircraft should cruise M080 at F350 at or later than time 1230Z.

2.44.3 A time restriction related to level and speed may be used in conjunction with a fix restriction as follows:

Example:

M080F350/1135A/M080F370/1220B 53N030W
Maintain M080 F350 until 1135Z then cleared M080 F370 to be level at or before 1220Z

M080F330/1135A/M080F370 53N030W
Maintain M080 F330 until 1135Z then climb to F370

60N010W/M084F350/1230B
After 60N010W cleared M084 FL350 to be maintaining at or before 1230Z

M083F330/1135L/60N020W
At 1135Z or later cleared M083 FL330 to be maintaining by 60N020W

M083F330/1135L
At 1135Z or later cleared M083 F330

2.5 Boundary positions in messages

2.51 The point used in field 14, Estimate Data, will normally be a boundary point but may also be an agreed point close to, rather than on, the FIR boundary.

2.6 Coordination of aircraft occupying blocks of levels

2.61 While the validity of flights occupying blocks of flight levels is recognised by ICAO Doc 4444 both in its voice phraseology section and in the CPDLC message set, no provision is made for the representation of such blocks in any of the ATS messages described by the document.

2.62 In order to ensure compatibility with other regions the following notation will be used in field 14:

Example

F310F350
Aircraft occupying a block spanning F310 to F350

F310F350F290A
Aircraft at or above F290 climbing towards the block described above

Chapter 3. Communications and Support Mechanisms

3.1 Introduction

3.11 Coordination communications are divided into two areas: one addresses the need for voice communications between ATSUs, whereas the other addresses the need for data communications. It is anticipated that the continuing implementation of automated data communications between ATSUs will result in a reduction in the utilization of voice communications.

3.2 Message headers, timers and ATSU indicators

3.21 Message headers.

3.21.1 The AFTN IA-5 Message Header, including the use of the Optional Data Field defined in ICAO Annex 10, Vol II and herein, will be employed for the exchange of all ATS data. The AFTN priority indicator FF shall normally be used for all data exchanges. The AFTN date time group may be used by administrations to monitor end to end delay performance of the data exchanges.

3.21.2 Optional data field.

3.21.2.1 The optional data field provides a flexible way to convey information from end-to-end, undisturbed by the communication processes along the path. Since the information is optional it is necessary to specify a unique number and ending for each defined use. Option 1 has already been allocated for additional addressing use, and will be found in ICAO Annex 10, Vol II. Option numbers 2 and 3 have been defined for computer applications to convey message/data unit identification and message/data unit reference information, respectively, and are adopted in this ICD. Other options can be defined and added as the need arises. The proposed encoding has no impact on AFTN switching centers as they ignore this part of the origin line.

3.21.3 Addressing.

3.21.3.1 The Source and Destination addresses of the AFTN header convey the direction and logical identity of the application processes exchanging AIDC data information. The application process must be aware of the AFTN addresses that are used for this function. The first four characters form the location, while the next three characters specify an office/agency or a processor at the given location. The eighth character of the address indicates the end system application and details of the naming assignment are contained in Chapter 6, *ATM Application Naming Conventions*. This approach allows up to 26 multiple applications to be co-hosted in the same processor, each having its own unique address. This implementation will make the addressing consistent with Open System Inter-connection (OSI) parameters and simplify the transition to the ATN.

3.21.4 Message/data identification number.

3.21.4.1 The message/data identification number is a six digit number, taken from a single application pool of available numbers. The identification of the sending and receiving units would use the normal eight character addresses of the AFTN header.

3.21.4.2 The message/data identification number is encoded and conveyed in the AFTN message header Optional Data Field (ODF), option 2. The AFTN implementation provides functionality consistent with the OSI primitive/parameter structure.

3.21.4.3 A message/data identification number will be assigned to each message/data unit requiring confirmation of receipt by the initiating processor. This number will be assigned by the application process basis in such a way as to guarantee a unique identification number for a period of time as specified in paragraph 3.21.7 below. For messages/data not requiring confirmation the message/data identification parameter shall not be used.

3.21.5 Reference Information.

3.21.5.1 The message/data reference information is a way of linking a message/data unit to a previously sent message. This function is encoded and conveyed in the AFTN ODF, option 3. This implementation would make the linking information consistent with the abstract OSI protocol primitive/parameter structure. The reference information consists of the message/data identification number of the previously sent message/data unit being referenced. As the previous message being referenced could have been originated by either processor, the location indicator of the message source shall be used as a prefix to the reference number. Examples are found in paragraph 3.22.5 below.

3.21.6 Time stamp.

3.21.6.1 The time stamp is expressed as 12 digits in year, month, day, hours, minutes, and seconds (YYMMDDHHMMSS). The precision (seconds) of the time stamp will support computation of transmission delays. This data item is conveyed as option 4 of the ODF.

3.21.7 Cyclic Redundancy Check (CRC).

3.21.7.1 The CRC is a four digit hexadecimal number that is used to ensure end-to-end message integrity. The CRC employed is the CRC-CCITT. The CRC is computed over the message text, from the beginning left parenthesis to the closing right parenthesis, inclusive. Non printable characters such as line feeds and carriage returns shall be excluded from the CRC calculation. This data item is conveyed as option 5 of the ODF.

3.22 Timers.

3.22.1 In order to guarantee the uniqueness of the message/data identification number, and yet allow for the efficient reuse of the numbers in the pool, two timers are required for each message/data unit requiring confirmation: accountability and reuse.

3.22.2 Accountability timer.

3.22.2.1 The accountability timer determines the maximum period of time for the responding application to confirm receipt of a given message/data unit. The default value for this timer nominally shall be three minutes. If there is no valid response from the responding application, the initiating processor shall retransmit the message/data unit and reset the timer, or initiate local recovery procedures. When local procedures allow retransmission, a maximum value, such as three, must be determined before local recovery procedures are initiated. The accountability timer shall be cancelled by the receipt of any message with the appropriate message/data reference identifier, which will typically be a LAM or LRM. Retransmissions use the same message/data identification number as the original message/data unit.

3.22.3 Reuse timer.

3.22.3.1 The reuse timer function employs two timers that determine the minimum period of time during which a message/data identification number is guaranteed to be unique. Reuse timer A shall be set for exchanges not involving dialogues between processors. The range for reuse timer A shall be from 1 to 30 minutes, in one minute increments. The default value for reuse timer A shall be 5

minutes, or as agreed by the concerned ATSUs. Reuse timer B shall be set for exchanges where a dialogue is involved in the exchange. The range for reuse timer B shall be 2 to 90 minutes, in one minute increments. The default value for reuse timer B shall be 10 minutes, or as agreed for communicating applications by the concerned administrations. A given message/data identification number can be reused when an ACP, AOC, or REJ response message is received or the reuse timer has expired.

3.22.4 System Failure Timer Procedures.

3.22.4.1 In the event of system failure, the accountability and reuse timers will be reset and resume timing upon completion of system recovery.

3.22.5 The following examples depict two APAC and two NAT AIDC Messages encoded in accordance with the previous procedures. The second message is a reference to the first message. SOH, STX, message ending and ETX characters are omitted for clarity, as are the alignment functions. The proposed encoding would have no impact on AFTN switching centres as they ignore this part of the origin line.

FF NFFFZOZO
122145 KZOAZOZO 2.000033-4.940412214523-5.A34B
(CPL-UAL714-IS-B747/H-S/C-KLAX-05S179W/2220F370-M082F370(route data) -YSSY-0)
Explanation: Sending an initial coordination message (number 000033 from Oakland Air Route Traffic Control Center (KZOAZOZO) to Nadi ACC (NFFFZOZO) at time 940412 214523.

FF KZOAZOZO
122147 NFFFZOZO 2.000044-3.KZOA000033-4.940412214703-5.DE6A
(ACP-UAL714-KLAX-YSSY)
Explanation: Nadi ACC (NFFFZOZO) accepts the proposed coordination condition received from Oakland Air Route Traffic Control Center (KZOAZOZO) by sending message number 000044 from NFFFZOZO to KZOAZOZO at 940412214703. The message refers to message 000033 sent earlier by KZOAZOZO

FF KZNYZOZO
122145 CZQMZOZO 2.000033-4.940412214523-5.A34B-
(CPL-UAL714-KJFK- etc.)
Explanation: Sending Message number 000033 from CZQMZOZO to KZNYZOZO at time 940412 214523.

FF CZQMZOZO
122147 KZNYZOZO 2.000044-3.CZQM000033-4.940412214703-5.DE6A-
(ACP-UAL714-KJFK-EGLL)
Explanation: Sending message number 000044 from KZNYZOZO to CZQMZOZO at 122147 and the data refers to message 000033 sent earlier by CZQMZRZO

3.22.6 ATSU location indicators.

3.22.6.1 ICAO location indicators must be used by automated ATSUs in AIDC messages.

3.22.6.2 The following ATS unit ICAO locations indicators will be used within the NAT region:

Bodø OAC	-	ENOB
Gander OAC	-	CZQX
New York OAC	-	KZWY

Reykjavik OAC - BIRD

Santa Maria OAC - LPPO

Shannon ACC - EISN

Shanwick OAC - EGGX

Søndre Strømfjord FIC - BGGL

3.22.6.3 The ATS unit organization code for the oceanic ATC application will be ZOZO. This organization code, when used with the ICAO location, forms the full ICAO address.

3.3 Engineering considerations

3.31 Future communications.

3.31.1 The future data communications infrastructure should be compatible with the ICAO ATN. The ground-ground logical connectivity table is at Table 3-1.

3.31.2 Until the ATN becomes available, the engineering details needed to implement the exchange of messages contained in Chapter 4, *ATS Coordination Messages*, will need to be agreed to bilaterally and identified in Chapter 7, *Implementation Guidance Material*.

Table 3-1. Logical Connectivity Table

	BGLL	BIRD	CZQX	EGGX	ENOB	KZWY	LPPO
BGGL		X			X		
BIRD	X		X	X	X		
CZQX		X		X		X	X
EGGX		X	X				X
ENOB	X	X					
KZWY			X				X
LPPO			X	X		X	

3.32 ATN transition support.

3.32.1 The AFTN will provide the underlying communications network and services in the near-term. Communication services provided by the ground element of the ATN will be eventually employed by the AIDC application.

3.32.2 The APANPIRG ATN Implementation Coordination Group (ICG) is currently considering the continued use of AFTN format for AIDC application in the Asia/Pacific region. When the ATS Message Handling System (AMHS) is implemented, the exchanges of AFTN messages on ATN can be accomplished using the AFTN/AMHS gateway function of the AMHS application. This

mechanism can be used to exchange the AFTN AIDC messages provided that the connection has been tested to meet the recommended performance criteria in Chapter 7, *Implementation Guidance Material*.

3.32.3 The APAC region will comply with ATN SARPs. A summary of these SARPs specifically relevant to ASIA/PAC operations, including addressing conventions and encoding rules, will be included within the document.

3.33 Performance Criteria.

3.33.1 If AIDC messages are not transmitted and received in a timely manner between automation systems, aircraft can potentially cross boundaries without coordination or transfer of control responsibility taking place. The benefits of AIDC are reduced if link speeds and transit times are inadequate.

3.33.2 In order to effectively use the AIDC application for the interchange of ATC coordination data, performance requirements need to be specified. These specified performance requirements need to be agreed to by neighboring states implementing AIDC. Recommended performance figures are specified in Chapter 7, *Implementation Guidance Material*, paragraph 7.23.1.

3.34 Recording of AIDC data.

3.34.1 The contents and time stamps of all AIDC messages shall be recorded in both end systems in accordance with the current requirements for ATS messages.

3.34.2 Facilities shall be available for the retrieval and display of the recorded data.

3.4 Test considerations

3.41 Many new oceanic ATC automation systems will be going on-line within the NAT. These systems will have to exchange critical ATC data among themselves, using the messages described in the PAN ICD.

3.42 Support for testing shall be provided. Test messages shall have the same format as existing NAT Core messages, but shall be distinguished by special callsigns. A test callsign shall begin with the letter 'Z', followed by the four-letter ICAO ATS Unit location indicator, as defined in Paragraph 3.22.6 above. The last two characters shall be numeric. The following are examples of valid test callsigns:

ZEGGX01

ZCZQX87

ZKZWY45

3.43 Testing shall be bi-laterally agreed between NAT ATS Providers.

Chapter 4. ATS Coordination Messages

4.1 Introduction

4.11 The following sections describe those messages used by APAC and NAT ATS systems for On-Line Data Interchange (OLDI). Message fields will conform to ICAO field definitions (PANS-RAC 4444, current version), and are referred to by field number. It should be noted that with respect to ATS Field 3, only Field 3 a), message type, shall be used. Information defined in Fields 3 b) and 3 c) is to be conveyed in the Optional Data Fields of the AFTN header as defined in Chapter 3, *Communications and Support Mechanisms*. In respect of ATS Field 13, only Field 13 a), the departure aerodrome designator, is required. Field 13 b) is not to be transmitted. All ATS data shall be enclosed between parentheses. Only one ATS message shall be included within a transmission. An overview of all NAT core messages and their composition can be found in Table 4-4, *AIDC Messages and their Field Composition.*

4.12 Coordination and the further route of flight.

4.12.1 Field 15 will describe the route beginning with the route point on or preceding the ACI boundary. It will contain the cleared route followed by the remaining route to destination. When a rerouting creates a discontinuity, the route will be terminated at that point and the truncation indicator "T" appended. Subject to bilateral agreement, Field 15 in CPL messages may always be limited to the cleared route (followed by the truncation indicator).Field 15 shall include subfields 15a, 15b, and 15c. It shall describe the cleared route, beginning with the last significant route point preceding the coordination point. It will contain all known cleared route information. As a minimum, it shall contain the first route significant point in the adjacent ATSUs airspace. If the cleared route of flight is not known completely to destination, the truncation indicator shall appear after the last known cleared significant route point. For example:

M083F340 SALAG B333 PUGEL/M083F360 T

M083F300 DCT FICKY B200 TATAS T

Note: In accordance with PANS-ATM Doc 4444 the truncation indicator shall only follow a significant point or significant point/Cruising Speed and Cruising level in Field 15 and shall not follow an ATS Route designator.

Note: ATSUs should be aware of the risks associated with simply deleting an unknown waypoint or route without using correct truncation procedures. Deletion of a waypoint or route will result in erroneous route information being transmitted to downstream ATSUs.

4.13 Field 3 requirements.

4.13.1 All messages shall use field 3a only.

4.13.2 Fields 3b and 3c are not used since, for AIDC, these reference numbers are included in the ODF, option 3. See Chapter 3, para 3.21.5.

4.14 Field 7 requirements.

4.14.1 Where Field 7 is mandatory in a message, Field 7a (Aircraft Identification) shall always be included. Fields 7b (SSR Mode) and 7c (SSR Code) are optional but should be included if the information is available and applicable.

4.2 Message group

4.21 The core messages shown in Table ~~A-1~~ 4-1 below are to be supported by all APAC and NAT ATS providers using automated data interchange.

4.22 Optional messages may be supported by ATS providers. Such messages will be detailed in bi-lateral agreements.

Table 4-1. AIDC Messages

Core	Opt	Message Class	Message
X		Notification	ABI (Advance Boundary Information)
X		Coordination	CPL (Current Flight Plan)
X			EST (Coordination Estimate)
X			MAC (Coordination Cancellation)
	X		PAC (Pre-activation)
X			CDN (Coordination Negotiation)
X			ACP (Acceptance)
X			REJ (Rejection)
	X		TRU (Track Update)
X		Transfer of Control	TOC (Transfer of Control)
X			AOC (Assumption of Control)
X		General Information	EMG (Emergency)
X			MIS (Miscellaneous)
X	X		NAT (Organized Tracks)
	X		TDM (Track Definition Message)
X		Application Management	LAM (Logical Acknowledgement Message)
X			LRM (Logical Rejection Message)
X	X		ASM (Application Status Monitor)
X	X		FAN (FANS Application Message)
X	X		FCN (FANS Completion Notification)
	X	Surveillance Data Transfer	ADS (Surveillance ADS-C)

4.3 Notification messages

4.31 ABI (Advance Boundary Information).

4.31.1 Purpose.

4.31.1.1 Used to give advance information on flights and shall be transmitted at a bilaterally agreed time or position (Variable System Parameter) before the common boundary. Changes to a previously transmitted ABI shall be communicated by means of another ABI. Changes to the cleared route of flight will result in the retransmission of an ABI.

4.31.2 Message format.

ATS Field Description

3a	Message type
7a	Aircraft identification
13a	Departure aerodrome
14abcde	Boundary estimate time
16a	Destination aerodrome
22	Amendment

Field 22 shall contain as a minimum the following fields:

9abc	Number, type of aircraft and wake turbulence category
15abc	Route (see Chapter 4, *ATS Coordination Messages*, para 4.12.1)

Field 22 may also optionally include any or all of the following fields:

8ab	Flight rules
10ab	Equipment
18	Other information as contained in the original flight plan must be transmitted, with the sole exception of the EET sub-field. Note that this field shall contain information as received by the sending centre or a subset thereof as agreed between the parties

Example

(ABI-IBE6175-LEMD-41N040W/0700F330-KMIA-8/IS-9/B747/H-10/SXW/C-15/M084F350 41N030W 41N040W 41N050W 40N060W 38N065W DANER A699 NUCAR DCT HEATT-18/0)
An aircraft containing full route details until destination.

(ABI-ICE615-BIKF-62N030W/0700F350F310A-KJFK-8/IS-9/B757/M-10/SXW/C-15/-M080F350 62N030W 60N040W 57N050W OYSTR STEAM T -18/0)
An aircraft cleared to F350 but entering the ACI at or above F310. Field 15 is truncated.

(ABI-VIR2-KEWR-55N040W/2323F330-EGLL-8/IS-9/B747/H-10/SXW/C-15/M085F330 55N040W NATY NURSI UN551 BEL UL10 HON BNN2A-18/0)
Field 15 containing a NAT track.

(ABI-BAW242-MMMX-42N050W/0623F330-EGLL-8/IS-9/B744/H-10/SIRWXY/C-15/M082F330 42N050W 45N040W 47N030W 49N020W BEDRA UN491 GUNSO UM197 GAPLI UR8 GIBSO-18/EET/KZHU0054 CZQX0546 45N040W0556 EGGX0643 49N020W0732 BEDRA0757 GUNSO0813 EGTT0833 OPR/BAW ORGN/EGLLBAWH RALT/CYQX EIDW REG/GBNLI RMK/TCAS SEL/BPCE DOF/040212)
Field 18 from the original FPL message included in the ABI.

Subject to bilateral agreement, the following field may also be included in Field 22:

Text	Amended Destination

4.31.3 Amended Destination is a free text field that may be used in the ABI message to notify an amended destination aerodrome. The field consists of an identifier (“DEST”) followed by a delimiter “/” character, followed by the name or the location of the new destination. When used, the Amended destination field is the last field with Field 22.

Example

(ABI-THA179-EGLL-15N090E/0700F330-VTBD-8/IS-9/B747/H-10/S/C-15/14N093W 13N097W YAY T-18/0)

(ABI-QFA43-YSSY-ESKEL/0300F330-NZAA-8/IS-9/B747/H-10/SIDHJRW/CD-15/SY L521 ESKEL TANEN WN-DEST/NZWN)

The second example shows an ABI following a diversion from the original destination (NZAA) to a new destination (NZWN)

4.31.4 More information concerning the usage of the Amended Destination field is contained in Chapter 7, *Implementation Guidance Material*.

4.4 Coordination messages

4.4.1 CPL (Current Flight Plan)

4.4.1.1 Purpose.

4.4.1.1.1 Used to initiate the initial coordination dialogue between automated ATS systems for a specific flight. Used to inform the receiving centre of the clearance issued to a flight. The receiving centre shall signal its acceptance by issuing an ACP, else the coordination dialogue will be continued using a CDN message.

4.4.1.2 Message format.

ATS Field	Description
3a	Message type
7a	Aircraft identification
8ab	Flight rules and type of flight
9abc	Aircraft type Number and type of aircraft and wake turbulence category
10ab	Navigation equipment
13a	Departure aerodrome
14abcde	Boundary estimate data
15abc	Route (see ~~Appendix A, paragraph 1.2.1~~ Chapter 4, *ATS Coordination Messages*, paragraph 4.12.1)
16a	Destination aerodrome
18	Other information as contained in the original flight plan must be transmitted, with the sole exception of the EET sub-field

Example

(CPL-QFA811-IS-B767/H-S/C-WSSS-20N070E/1417F350-M080F350 30N060E 40N090E YAY T-EGLL-0)

(CPL-UAL815-IS
-B777/H-S/C
-LFPG-54N030W/1417F350
-M080F350 54N020W 54N030W 54N040W 52N050W YAY T
-KIAD
-0)
An aircraft in level flight. The route in field 15 is truncated.

(CPL-ICE615-IS
-B757/H-SWX/C
-BIKF-62N030W/1701F350F310A
-M080F350 62N030W 60N040W 57N050W OYSTR STEAM T
-KJFK
-0)
An aircraft cleared to F350 but entering the ACI at or above F310

(CPL-IBE6123-IS -B747/H-
SXWC/C
-LEMD-41N030W/1325F350
-M084F350 41N030W 41N040W 41N050W 40N060W 38N065W DANER A699 NUCAR DCT
HEATT
-KMIA
-0)
The coordination point preceding the boundary as per bilateral agreement and also a full route to destination.

(CPL-VIR2-IS
-B747/H-SXW/C
-KEWR-55N040W/2323F330
-M085F330 55N040W NATY NURSI UN551 BEL UL10 HON BNN2A
-EGLL
-0)
Field 15 containing a NAT track.

(CPL-BAW242-IS
-B744/H-SIRWXY/C
-MMMX-42N050W/0623F330
-EGLL
-M082F330 42N050W 45N040W 47N030W 49N020W BEDRA UN491 GUNSO UM197 GAPLI
UR8 GIBSO
-EGLL
-EET/KZHU0054 CZQX0546 45N040W0556 EGGX0643 49N020W0732 BEDRA0757
GUNSO0813 EGTT0833 OPR/BAW ORGN/EGLLBAWH RALT/CYQX EIDW REG/GBNLI
RMK/TCAS SEL/BPCE DOF/040212)
Field 18, other information.

4.4.2 EST (COORDINATION ESTIMATE)

4.4.2.1 Purpose.

4.4.2.1.1 Used to inform the receiving centre of the crossing conditions for a flight and to indicate that the conditions are in compliance with agreements between the two parties. An ACP message shall be transmitted to complete the coordination process. The only valid response to an EST is an ACP.

4.4.2.2 Message Format

ATS Field	Description
3a	Message type
7a	Aircraft identification

13a	Departure aerodrome
14	Boundary estimate data
16a	Destination aerodrome

Example

(EST-DLH454-EDDF-BOPUT/1248F360-KSFO)
(EST-QFA811/A2277-WSSS-20N070E/1417F350-YAYT)

4.4.3 PAC (PREACTIVATION)

4.4.3.1 Purpose.

4.4.3.1.1 Used to inform the receiving centre of the crossing conditions for a flight which has not yet departed and to indicate that the conditions are in compliance with agreements between the two parties. Normally it is only used when the departure point is close to the FIR boundary and preflight coordination is required.

Note: On receipt of a PAC message and ACP message is required to be transmitted to complete the coordination process. The only valid response to a PAC is an ACP.

4.4.3.2 Message Format

ATS Field	Description
3	Message type
7	Aircraft identification
13	Departure aerodrome
14	Boundary estimate data
16	Destination aerodrome
22	Amendment (optional field)

Field 22 may optionally include any or all of the following fields

8	Flight rules
9	Number, type of aircraft and wake turbulence category
10	Equipment
15	Route (see Chapter 4, *ATS Coordination Messages*, paragraph 4.12.1)
18	Other information. Note that this field shall contain information as received by the sending centre or a subset thereof as agreed between the parties.

Example

(PAC-QFA811/A2277-WSSS-20N070E/1417F250-YAYT-10/S/C)

4.4.4 MAC (COORDINATION CANCELLATION)

4.4.4.1 Purpose.

4.4.4.1.1 Used specifically to indicate to a receiving centre that all notification and/or coordination received for a flight is no longer relevant to that centre. This message is not to be considered as a CNL message.

4.4.4.2 Message Format

ATS Field	Description

3a	Message type
7a	Aircraft identification
13a	Departure aerodrome
16a	Destination aerodrome
22	Amendment (optional field)

Field 22 may contain the following fields:

14	Boundary Estimate Data
18	Other information

Field 14 may be transmitted containing the boundary estimate data previously transmitted. It may be used if required, to correctly identify the flight concerned by the MAC, when appropriate. If a MAC is transmitted as a result of a diversion to a new destination (i.e. such that the receiving ATSU is no longer affected by the flight), Field 16 – Destination aerodrome – should contain the destination contained in the original Notification and/or coordination messages.

Example

(MAC-BCA789-EGKK-KLAX)
(MAC-ICE234-BIKF-EGPF)
(MAC-SIA286-NZAA-WSSS)
(MAC-THA989-VTBD-YMML-18/RMK/DIVERTED TO YPDN)
(MAC-FJI910-YSSY-NFFN-14/DUBEV/2330F370)

4.4.5 CDN (COORDINATION NEGOTIATION)

4.4.5.1 Purpose.

4.4.5.1.1 Used to propose changes to the coordination conditions agreed to in a previously transmitted CPL, EST, PAC, or CDN message. Only one CDN dialogue can be active per flight at any given time between the same two ATSU's (refer Chapter 7, *Implementation Guidance Material*, para 7.33.5). The initial coordination dialogue is always terminated by an ACP message; otherwise a unit receiving a CDN can indicate that the coordination conditions should be left as previously agreed by transmitting an REJ message. CDN dialogues should be closed prior to the Transfer of Control occurring.

4.4.5.1.2 ATSUs should ensure that appropriate procedures are defined in bilateral Letters of Agreement for dealing with CDN messages containing a number of revisions (e.g. a revised estimate and level). There may be occasions when the receiving ATSU can accept one of the amendments but not the other.

4.4.5.2 Message Format.

ATS Field	Description
3a	Message type
7a	Aircraft identification
13a	Departure aerodrome
16a	Destination aerodrome
22	Amendment

Under normal circumstances, Field 22 may only contain fields 14, 15, and 18. Subject to bilateral agreement, the following fields may also be included in Field 22.

10	Equipment
Text	Amended Destination

4.4.5.3 Amended Destination is a free text field that may be used in the CDN message to propose the coordination of a new destination aerodrome. The field consists of an identifier ("DEST") followed by a "/" character, followed by the name or location of the destination. When used, the Amended destination field is the last field within Field 22.

Example

(CDN-NWA36-KBOS-EDDF-14/54N030W/0446F370)
(CDN-NWA36-NFFN-RJTT-14/20N150E/0446F370)
(CDN-QFA1-YSSY-WSSS-10/SDGHIJRYZ/SD)
(CDN-KAL823-RJAA-NZCH-15/LTO G591 AA-DEST/NZAA)
(CDN-MAPLE1-PKMJ-ZZZZ-14/MARTI/2200F310-15/MARTI 02N168E-DEST/0150N16745E)

4.4.5.4 The last two examples demonstrate a CDN proposing a new route to an amended destination. In example iii, there is no change to Field 14 – Boundary estimate data. The last example shows a change of route with a corresponding change to Field 14. The "DEST/" included in this example refers to the proposed destination, rather than the original "ZZZZ" destination. Refer to Chapter 7, *Implementation Guidance Material*, for the methodology in proposing a diversion to a new destination.

4.4.6 ACP (ACCEPTANCE)

4.4.6.1 Purpose.

4.4.6.1.1 Used to confirm that the conditions contained in a received CPL, CDN, EST or PAC message are accepted. ACP messages may be generated automatically or manually.

4.4.6.2 Message Format.

ATS Field	Description
3a	Message type
7a	Aircraft identification
13a	Departure aerodrome
16a	Destination aerodrome

Example

(ACP-ACA860-NZAA-KSFO)

4.4.7 REJ (REJECTION)

4.4.7.1 Purpose.

4.4.7.1.1 Used to reject a clearance proposed by a CDN to a previously coordinated flight and terminate the coordination dialogue. The coordination remains as was previously agreed.

4.4.7.2 Message Format.

ATS Field Description

3a	Message type
7a	Aircraft Identification
13a	Departure Aerodrome
16a	Destination Aerodrome

Example

(REJ-AAL780-KJFK-EGLL)
(REJ-AAL780-KSFO-RJAA)

4.4.8 TRU (TRACK UPDATE)

4.4.8.1 Purpose.

4.4.8.1.1 Used to coordinate amendments to previously agreed coordination conditions where prior coordination of the changes is not required. Because there is no operational response to the TRU message, use of this message must be in strict accordance with bilateral agreements between ATSUs concerned.

4.4.8.2 Message Format.

ATS Field	Description
3	Message type
7	Aircraft Identification
13	Departure Aerodrome
16	Destination Aerodrome
Text	Track Data

4.4.8.3 Track data is a free text field used in the TRU message to permit the transfer of updated clearance information from one ATSU to another. This field contains a number of elements which are described below. Each element consists of an "identifier" and a value which are separated by a "/" character.

4.4.8.4 All of the elements within the Track data field are optional, and multiple elements may be included, separated by a single <space> character. Track data will contain at least one element. When multiple elements are to be transmitted in a single TRU message, the order of the elements within the Track data field is the order in which they are listed below. Unused elements are not included in the Track data field.

4.4.8.5 Heading (HDG)

4.4.8.5.1 This optional element is preceded by the identifier 'HDG' and contains the magnetic heading that has been assigned to the aircraft, expressed as a three digit number between 001 and 360.

Example

HDG/080

4.4.8.6 Cleared Flight Level (CFL)

4.4.8.6.1 This optional element is preceded by the identifier 'CFL' and contains the amended level that the aircraft has been assigned. Block levels in accordance with Chapter 2, *Purpose, Policy and Units of Measurement*, para 2.34.2, are also supported.

Example

CFL/F330
CFL/F310F330
CFL/F310F330F210A

4.4.8.7 Speed (SPD)

4.4.8.7.1 This optional element is preceded by the identifier 'SPD' and contains details of the speed (Mach Number or Indicated airspeed) that the aircraft has been assigned.

Mach numbers are expressed as "M" followed by 3 numeric giving the true Mach Number or to the nearest .01 Mach.

Indicated airspeeds are expressed as "I" followed by 4 numeric giving the Indicated Airspeed in knots.

4.4.8.7.2 To cancel an assigned speed that had been previously coordinated, the SPD identifier is followed by a "/" character, followed by a zero (0).

Example

SPD/M084
SPD/I0250
SPD/0

4.4.8.8 Direct to (DCT)

4.4.8.8.1 This optional element is preceded by the identifier "DCT" and contains the position that the aircraft has been cleared directly to.

Example

DCT/MICKY
DCT/30S160E

4.4.8.9 Off track deviation (OTD)

4.4.8.9.1 This optional element is preceded by the identifier 'OTD' and contains the details of any off track clearance that has been issued to the aircraft. The format of the off track deviation is as described in Chapter 2, *Purpose, Policy and Units of Measurement*, para 2.35; i.e,

a single character providing advice as to whether the clearance is an offset (O) or a weather deviation (W); and

an off track distance associated with this clearance:

a direction, indicating left (L) or right (R) or, in the case of weather deviation, either side of track (E); and

when including Offset information in and AIDC message, the direction "E" (either side of track) shall not be used

4.4.8.9.2 To cancel a previously coordinated off track deviation, the OTD identifier is followed by a "/" character, followed by a zero (0).

Example

OTD/W20R
OTD/O30L

OTD/0

4.4.8.10 Depending on automation, the receiving ATSU may automatically update their flight plan data, or simply display the message to the responsible controller.

Example

(TRU-UAL73-NTAA-KLAX-CFL/F280 OTD/W20R)
(TRU-QFA43-YSSY-NZAA-HDG/115 CFL/F270)

4.5 Transfer of control messages

4.5.1 TOC (TRANSFER OF CONTROL)

4.5.1.1 Purpose.

4.5.1.1.1 Used to offer the receiving centre executive control of a flight

4.5.1.2 Message Format

ATS Field	Description
3a	Message type
7a	Aircraft identification
13a	Departure aerodrome
16a	Destination aerodrome

Example

(TOC-TAP451-LPPT-KJFK)
(TOC-TAP451/A2217-YMML-NZCH)

4.5.2 AOC (ASSUMPTION OF CONTROL)

4.5.2.1 Purpose.

4.5.2.1.1 Sent in response to a TOC to indicate acceptance of executive control of a flight.

4.5.2.2 Message Format.

ATS Field	Description
3a	Message type
7a	Aircraft identification
13a	Departure aerodrome
16a	Destination aerodrome

Example

(AOC-TAP451-LPPT-KJFK)
(AOC-TAP451/A2217-NFFN-PHNL)

4.6 General information messages

4.6.1 EMG (EMERGENCY)

4.6.1.1 Purpose.

4.6.1.1.1 Used at the discretion of ATSUs when it is considered that the contents require immediate attention. Normally the information would be presented directly to the controller responsible for the flight or to the controller expecting to receive responsibility for the flight. When the message does not refer to a specific flight, a functional address shall be used and the information presented to the appropriate ATS position. Where such an address is used it is preceded by an oblique stroke (/) to differentiate it from aircraft identification. The following are some examples of circumstances which could justify the use of an EMG message.

a) Reports of emergency calls or emergency locator transmission reports.

b) Messages concerning hi-jack or bomb warnings.

c) Messages concerning serious illness or disturbance among passengers.

d) Sudden alteration in flight profile due to technical or navigational failure.

e) Communications failure.

4.6.1.2 Message format.

ATS Field	Description
3a	Message type
7a	Aircraft identification or functional address
18	Other information

Example

(EMG-UAL123-RMK/Free Text)
(EMG-/ASUP-RMK/Free Text)

4.6.2 MIS (MISCELLANEOUS)

4.6.2.1 Purpose.

4.6.2.1.1 Used to transmit operational information which cannot be formatted to comply with any other message type and for plain language statements. Normally the information would be presented directly to the controller responsible for the flight or to the controller expecting to receive responsibility for the flight. When the message does not refer to a specific flight, a functional address shall be used and the information presented to the appropriate ATS position. Where such an address is used it is preceded by an oblique stroke (/) to differentiate it from an aircraft's identification.

4.6.2.2 Message format.

ATS Field	Description
3a	Message type
7a	Aircraft identification
18	Other information

Examples

(MIS-NWA456-RMK/Free Text)

(MIS-/ASUP-RMK/Free Text)

4.6.3 TDM (TRACK DEFINITION MESSAGE)

4.6.3.1 Purpose.

4.6.3.1.1 Used to distribute track information to affected Area Control Centres (ACCs) and Airline Operational Control Centres (AOCs) for flight planning. The message contains track definition and activity time periods.

4.6.3.2 Message Format.

1. Message Identifier. The message begins with a "(TDM" and ends with ")". Fields within the message are separated by a space (i.e. " ").

2. Track Name. The track name consists of two fields. The first field is always TRK. The second field is the track identifier. The track identifier consists of 1 to 4 alphanumeric characters.

3. General Information. Contains:

a. Date and time the track was generated and message number tor that particular track in YYMMDDHHMMNN format where NN represents the message number. The initial TDM date/time message number group will look like: 941006134501. Message numbers 02 to 99 indicate TDM amendments or revisions. Note that zero padding may be required to provide the correct number of digits.

b. Track status – Blank field for initial message or "AMDT" for amendment.

4. Activity Time Interval. This field consists of two date/time pairs, separated by a blank character, in the following format: YYMMDDHHMM YYMMDDHHMM.

The first date/time pair represents the track activation, while the second is the track termination date/time.

Example: 9410070300 9410071500.

This example represents an activation date/time of October 7, 1994, at 0300 UTC and a termination date/time of October 7, 1994 at 1500 UTC.

5. Track Waypoint. This field contains the set of waypoints defining the track from the ingress fix to the egress fix. Waypoints are represented as latitude/longitude or named en route points. Waypoints are separated from each other by a blank space. Note that zero padding may be required. For example:

60N150W 60N160W, or NORMUL NUMMI, or FINGS 5405N13430W, etc.

6. Optional Fields

a. Level: This optional field will not be used in the Pacific operations since levels are published in separate documents, e.g. Pacific Ocean Supplements. However, the field will be retained for possible future use. If used in the future, track levels lists may be specified for the east and westbound directions of flight and a track levels list would contain the complete list of levels available on the track for the specified direction of flight. The levels would apply to all waypoints in the track waypoint list.

b. Connecting routes (RTS): The RTS field is an optional field not normally used by automated ATS systems. When used, it is located after the waypoint list (before the remarks

field) and begins with the keyword "RTS/" at the beginning of a line. Each line of the RTS field contains a single connecting route (to the ingress fix or from the egress fix).

7. Remarks: The Remarks subfield is a free text field that can contain additional comments. If there are no remarks a zero (0) is inserted as the only text. The remarks subfield begins with "RMK/".

Examples

The following TDM describes a route connecting Honolulu and Japan and would look similar to:

(TDM TRK A 940413124001
9404131900 9404140800
LILIA 27N170W 29N180E 31N170E 32N160E MASON
RTS/PHNL KEOLA2 LILIA
MASON OTR 15 MOLT OTR 16 SUNNS OTR20 LIBRA RJAA RMK/0)

The following TDM Revision describes a revision to the TDM shown above.

(TDM TRK A 940413131502 AMDT
9404131900 9404140800
LILIA 27N170W 29N180E 30N170E 32N160E MASON
RTS/PHNL KEOLA2 LILIA
MASON OTR15 SMOLT OTR16 SUNNS OTR20 LIBRA RJAA RMK/0)

In the example given above, the message number (as delineated by the last two digits of the message generation date/time group) indicates it as the second ("2") message for the track. This is followed by "AMDT" to signify the previous message has been amended.

4.6.4 NAT (ORGANIZED TRACK STRUCTURE)

4.6.4.1 Purpose.

4.6.4.1.1 Used to publish the organized track structure and the levels available. The message may be divided into several parts to enable it to be transmitted.

4.6.4.2 Message Format.

ATS Field	Description
3a	Message type
Text	Structured text

4.6.4.3 Structured Text Format.

4.6.4.3.1 It is required to adhere strictly to the syntax described hereafter in order to facilitate automated processing of NAT messages.

4.6.4.3.2 In the examples below, text between angle brackets should be understood to represent characters by their ASCII name. E.g. <sp> stands for 'space character', <cr> for 'carriage return>, <lf> for 'line feed', and any combination <crlf> is the same as <cr><lf>. No control

character shall be inserted in the message text unless specified as in the examples below. This restriction of course applies to <cr> and <lf> as well as any other control character.

4.6.4.3.3 It shall be noted that NAT Track messages shall otherwise follow current AFTN syntax requirements as expressed in ICAO Annex 10, Chapter 11, current version, e.g. that the alignment function with the message text, header and trailer is composed of a single <cr> followed by a single <lf>. However modern systems shall also be able to process the older alignment function composed of a double <cr> followed by a single <lf> as if it were a single <cr> followed by a single <lf> for backward compatibility reasons and to facilitate transition.

4.6.4.3.4 Characters in **bold underlined** in Message Text (syntax) column are to be replaced or dealt with as explained in the Description column.

4.6.4.3.5 The structured text is first composed of a NAT message header, as follows:

Id	Message Text (syntax)	Description (semantics)
1	(NAT-**a**/**b**<sp> TRACKS<sp>	**a** designates the part number in the **b** parts of the NAT message (**a** and **b** are one decimal digit)
2	FLS<sp>**nnn**/**mmm** <sp>INCLUSIVE	**nnn** and **mmm** designating the minimum and maximum concerned flight levels in hundreds of feet (three decimal digits)
3	<crlf>	
4	**month**<sp>**d1/h1m1**Z <sp>TO<sp>	Validity time with: **month**: for the month of validity full month name in letters
	month<sp>**d2/h2m2**Z	**d1/h1m1**: beginning time of validity **d2/h2m2**: ending time of validity(day/hour minute, 2 digits each, no space, leading zero required if number is less than 10)
5	<crlf>	
6	PART<sp>**a** <sp>OF<SP> b<sp> PARTS-	**a** and **b** textual numbers (ONE, TWO, THREE, FOUR) or one decimal digit. Both numbers shall represent the same digits as referred to in item Id 1 above. Terminal character **S** may be omitted if **b** is ONE.
7	<crlf><crlf>	

4.6.4.3.6 Following the NAT message header is a repeat of the following structure for each North Atlantic Track part of the message. If the resulting NAT message text is longer than 1800 characters, it must be separated into as many parts as necessary. Separation must happen between individual North Atlantic Track descriptions, not within an individual description.

Id	Message Text (syntax)	Description (semantics)
8	**L**	letter designating the name of the NAT track. One of:

		ABCDEFGHIJKLM for Westbound tracks. The most northerly Track of the day is designated as NAT Track Alpha, the adjacent Track to the south as NAT Track Bravo, etc, NPQRSTUVWXYZ for Eastbound tracks The most southerly Track of the day is designated as NAT Track Zulu, the adjacent Track to the north as NAT Track Yankee, etc, Tracks must be defined in sequence starting at any letter in the appropriate set, each following track using the immediately following letter in that set, e.g. UVWXYZ or ABCDE etc. The first track in the message shall be the most northerly one and each subsequent track shall be the next one towards the south.
9	<sp>	
10	**list of points**	Each point, separated by a space, is either significant points (named points from the published ICAO list of fixes) or a LAT/LONG given in degrees or degrees and minutes. At present only whole degrees are used. Acceptable LAT/LONG syntaxes are: ➢ xx/yy ➢ xxmm/yy ➢ xx/yymm ➢ xxmm/yymm Where xx is the north latitude, yy the west longitude, and mm the minutes part of the latitude or longitude.
11	<crlf>	
12	EAST LVLS<sp>**List of allowed levels**	list the allowed flight levels for eastbound flights. This list can contain NIL if there is no allowed level or a list of numbers (3 decimal digits) for each allowed level separated by a space.
13	<crlf>	
14	West LVLS<sp>**List of allowed levels**	list the allowed flight levels for westbound flight. This list can contain NIL if there is no allowed level or a list of numbers (3 decimal digits) for each allowed level separated by a space.
15	<crlf>	
16	EUR<sp>RTS<sp>	(optional field)
	WEST<sp>**XXX** <sp> VIA<sp>**RP**	Note that the indentation does not indicate the presence of space characters, it is a presentation mechanism to highlight two variant syntaxes for this field.
	OR	
	EUR<sp>RTS<sp> WEST<sp> NIL	Description of European links to the tracks, this description will be given separately for Eastbound and/or Westbound flights.

		XXX designating the Irish/UK route structure linked to the NAT track. **RP** designating the point recommended to be over flown by westbound flights for joining the NAT track. The text "VIA<sp>**RP**" is optional. Or There is no European link.
17	<crlf>	
18	NAR<sp>**list**	(optional)
	OR NAR<sp>NIL	Description of North American links to the tracks list list of North American airways recommended to be overflown by flights for joining or leaving the NAT track Or There are no recommended North American airways
19	-	
20	<crlf><crlf>	

And to terminate the NAT message is composed of a trailer

Id	Message Text (syntax)	Description (semantics)
21	<crlf>	
22	REMARKS<crlf>**text** <crlf>	This field is optional and can only be present in the last part of a multipart NAT message, or in the unique part in case of a mono-part NAT message. The remark text must contain the Track Message Identifier (TMI). It is recommended to consistently place the TMI in the first remark. The syntax for the TMI is as follows: Any text may precede the keywords that identify the TMI. The TMI is recognised as the first occurrence of the string (without the quotes) "TMI<sp>IS<sp>**xxx"** is the TMI and "**a**" the optional track message revision letter. To facilitate automated processing, this string shall be followed by a space character before any subsequent remark text is inserted in the track message. The TMI shall be the Julian calendar day in the year – i.e. starting at one (001) on the first of January or each year, 002 for second of January etc.
23	END<sp>OF<sp>PART <sp>**a**<sp>OF<sp>**b**	**a** and **b** textual numbers (ONE, TWO, THREE, FOUR) or one decimal digit.
	<sp>PART**S**)	Both numbers must be the same as in field 6 above.

Terminal character **S** may be omitted if **b** is ONE.

4.6.4.3.7 Example of westbound message set.

```
 (NAT-1/3 TRACKS FLS 310/390 INCLUSIVE
JULY 01/1130Z TO JULY 01/1800Z
PART ON OF THREE PARTS-

A 57/10 59/20 61/30 62/40 62/50 61/60 RODBO
EAST LVLS NIL
WEST LVLS 320 340 360 380
EUR RTS WEST NIL
NAR N498C N4996C N484C-

B 56/10 58/20 60/30 61/40 60/50 59/60 LAKES
EAST LVLS NIL
WEST LVLS 310 330 350 370 390
EUR RTS WEST 2
NAR N434C N428C N424E N416C

C 55/10 57/20 59/30 60/40 59/50 PRAWN YDP
EAST LVLS NIL
WEST LVLS 310 32 330 340 350 360 370 380 390
EUR RTS WEST NIL
NAR N322B N326B N328C N336H N346A N348C N352C N356C N362B-

D MASIT 56/20 58/30 59/40 58/50 PORGY HO
EAST LVL NIL
WEST LVLS 310 320 330 340 350 360 370 380 390
EUR RTS WEST DEVOL
NAR N284B N292C N294C N298H N302C N304E N306C N308E N312A-

E 54/15 55/20 57/30 57/40 56/50 SCROD VALIE
EAST LVLS NIL
WEST LVLS 310 320 330 340 350 360 370 380 390
EUR RTS WEST BURAK
NAR N240C N248C N250E N252E N254A N256A N258A N260A-

END OF PART ONE OF THREE PARTS


(NAT-2/3 TRACKS FLS 310.390 INCLUSIVE
JULY 01/1130Z TO JULY 01/1800Z
PART TWO OF THREE PARTS

F 53/15 54/20 56/30 56/40 55/50 OYSTR STEAM
EAST LVLS NIL
WEST LVLS 310 320 330 340 350 360 370 380 390
EUR RTS WEST GUNSO
NAR NIL-

END OF PART TWO OF THREE PARTS)


(NAT-3/3 TRACKS FLS 310/390 INCLUSIVE
```

```
JULY 01/1130Z TO JULY 01/1800Z
PART THREE OF THREE PARTS-

H BANAL 43/20 44/30 44/40 43/50 JEBBY CARAC
EAST LVLS NIL
WEST LVLS 310 350 370
EUR RTS WEST DIRMA
NAR N36E N44B-

REMARKS
1. TMI IS 182 AND OPERATORS ARE REMINDED TO INCLUDE THE TMI NUMBER
AS PART OF THE OCEANIC CLEARANCE READ BACK.
2. OPERATORS ATTENTION IS DRAWN TO CZUL NOTAM A2152/01
3. OPERATORS ATTENTION IS DRAWN TO UK NOTAMS A1098/01 AND G0120/01
4. MNPS AIRSPACE EXTENDS FROM FL285 TO FL420. OPERATORS ARE
REMINDED THAT SPECIFIC MNPS APPROVAL IS REQUIRED TO FLY IN THIS
AIRSPACE. IN ADDITION, RVSM APPROVAL IS REQUIRED TO FLY BETWEEN
FL310 AND FL390 INCLUSIVE.
5. EIGHTY PERCENT OR GROSS NAVIGATION ERRORS RESULT FROM POOR
COCKPIT PROCEDURES. ALWAYS CARRY OUT PROPER WAY POINT CHECKS.-
END OF PART THREE OR THREE PARTS)
```

4.6.4.3.8 Example of eastbound message set.

```
(NAT-1/1 TRACKS FLS 310/390 INCLUSIVE
JULY 01/0100Z TO JULY 01/0800Z
PART ONE OF ONE PART-

V YAY 53/50 54/40 55/30 56/20 56/10 MAC
EAST LVLS 310 320 330 340 350 360 370 380 390
WEST LVLS NIL
NAR N125A N129B-

W DOTTY 52/50 53/40 54/30 55/20 55/10 TADEX
EAST LVLS 310 320 330 340 350 360 370 380 390
WEST LVLS NIL
EUR RTS WEST NIL
NAR N109E N113B-

X CYMON 51/50 52/40 53/30 54/20 54/15 BABAN
EAST LVLS 310 320 330 340 350 360 370 380 390
WEST LVLS NIL
EUR RTS WEST NIL
NAR N93B N97B-

Y YQX 50/50 51/40 52/30 53/20 53/15 BURAK
EAST LVLS 310 320 330 340 350 360 370 380 390
WEST LVLS NIL
EUR RTS WEST NIL
NAR 77B N83B-

Z VIXUN 49/50 50/40 51/30 52/20 52/15 DOLIP
EAST LVLS 310 320 330 340 350 360 370 380 390
WEST LVLS NIL
EUR RTS WEST NIL
NAR 61B N67B-
```

```
REMARKS:
1. TMI IS 182 AND OPERATORS ARE REMINDED TO INCLUDE THE TMI NUMBER
AS PART OF THE OCEANIC CLEARANCE READ BACK.
2. CLEARANCE DELIVERY FREQUENCY ASSIGNMENTS FOR AIRCRAFT OPERATING
FROM MOATT OT BOBTU INCLUSIVE: MOATT – SCROD 128.7 OYSTR – DOTTY
135.45 CYMON – YQX 135.05 VIXUN – COLOR 128.45 BANCS AND SOUTH
119.42
3. PLEASE REFER TO INTERNATIONAL NOTAMS CZUL A2152/01
4. MNPS AIRSPACE EXTENDS FROM FL285 TO FL420. OPERATORS ARE
REMINDED THAT SPECIFIC MNPS APPROVAL IS REQUIRED TO FLY IN THIS
AIRSPACE. IN ADDITION, RVSM APPROVAL IS REQUIRED TO FLY WITHIN THE
NAT REGIONS BETWEEN FL310 AND FL390 INCLUSIVE.
5. 80 PERCENT OF GROSS NAVIGATIONAL ERRORS RESULT FROM POOR
COCKPIT PROCEDURES. ALWAYS CARRY OUT PROPER WAYPOINT CHECKS.
6. REPORT NEXT WAYPOINT DEVIATIONS OF 3 MINUTES OR MORE TO ATC.
7. EASTBOUND UK FLIGHT PLANNING RESTRICTIONS IN FORCE. SEE NOTAMS
A1098/01.
END OF PART ONE OF ONE PART)
```

4.7 Application management messages

4.7.1 LAM (LOGICAL ACKNOWLEDGEMENT MESSAGE)

4.7.1.1 Purpose.

4.7.1.1.1 Sent for each message (except for another LAM or LRM) that has been received, processed, found free of errors and, where relevant, is available for presentation to a control position. Non-receipt of a LAM may require local action. Used to acknowledge successful receipt of a transmitted message. The message identifier and reference identifier are found in the message header which is defined in Chapter 3, *Communications and Support Mechanisms*.

4.7.1.2 Message Format.

ATS Field	Description
3a	Message type
18	Other information as contained in the original flight plan must be transmitted, with the sole exception of the EET sub-field

Example

(LAM)

4.7.2 LRM (LOGICAL REJECTION MESSAGE)

4.7.2.1 Purpose.

4.7.2.1.1 Used to reject a message which contains invalid information. The message identifier and reference identifier are found in the message header, which is defined in Chapter 3, *Communications and Support Mechanism*. The LRM will identify the first field found that contains invalid information if this field information is available.

4.7.2.2 Message Format.

ATS Field Description

3a	Message type
18	Other Information as contained in the original flight plan must be transmitted, with the sole exception of the EET sub-field

4.7.2.3 Field 18 will only use the RMK/ sub-field. It will comprise an error code, supporting text and the ICAO field number in which the error occurred (where applicable).

4.7.2.4 The following format is used in the RMK/ sub-field of the LRM to report errors:

<error code>/<field number>/<invalid text>

4.7.2.5 A catalogue of error codes and supporting text is contained in Chapter 5, *Error Codes*.

Example

(LRM-RMK/27/15/93N070W)
This message denotes an invalid lat/lon in Field 15.)

4.7.2.6 The <error code> shall contain the appropriate error code number from Chapter 5, *Error Code*, Table 5-1. The error code is described using up to three numeric characters without leading zeros. When multiple errors are detected in an AIDC message, only a single LRM should be generated in response. This LRM would usually contain the error code of the first error detected.

4.7.2.7 The <field number> will contain the field number corresponding to the error code extracted from Table 5-1, *Error Codes*. Where multiple field numbers are assigned to an error code, only the first field number containing the error will be sent. Where no field number is referenced in Table 5-1, *Error Codes*, and the field number sub-field will be empty. The field number can be described using up to six alphanumeric characters.

> **Note:** Some ATSUs may not support non-numeric field numbers (e.g. "HEADER"). Whilst this is acceptable in order to preserve backwards compatibility with existing systems, the preferred implementation is for any non-numeric field numbers for Table 5-1 to be supported within the LRM.

4.7.2.8 The <invalid text> field will contain the error text corresponding to the error code extracted from Table 5-1 (not including any of 'explanatory text' that may have been included in Table 5-1). If the specific error can be identified, it may optionally be appended to the Table 5-1 error text. The invalid text field can contain up to 256 characters.

> **Note:** Some ATSUs may not include the error text from Table 5-1, *Error Codes*, in the <invalid text> field of transmitted LRMs. Whilst this is acceptable in order to preserve backwards compatibility with existing systems, the preferred option is the LRM <invalid text> field to at least contain the error text from Table 5-1.

4.7.2.9 The following shows a number of LRM examples. Where more than one LRM format is shown, the format of the first one is the preferred option.

Example

(LRM-RMK/1/HEADER/INVALID SENDING UNIT)

OR

(LRM-RMK/1/ /INVALID SENDING UNIT)
(See Note following paragraph 4.7.2.7)

(LRM-RMK/17/16/INVALID AERODROME DESIGNATOR)

OR

(LRM-RMK/17/16/)
(See Note following paragraph 4.7.2.8)

(LRM-RMK/57//INVALID MESSAGE LENGTH)

(LRM-RMK/27/15/ INVALID LAT/LON 130S165E)
(The actual error "130S165E" may be optionally appended to the error text from Table 5-1, *Error Codes* see para 4.7.2.8).

4.7.3 ASM (APPLICATION STATUS MONITOR)

4.7.3.1 Purpose.

4.7.3.1.1 Sent to an adjacent centre to confirm that the adjacent centre's ATC application system is online. It is transmitted when no other application messages have been received within an adaptable time. The periodic interval between transmissions of this message should be determined based on the needs of the operation environment. Typical values may be between 5 and 30 minutes.

4.7.3.2 Message Format.

ATS Field	Description
3a	Message type

Example

(ASM)

4.7.4 FAN (FANS APPLICATION MESSAGE)

4.7.4.1 Purpose.

4.7.4.1.1 Transmitted by one ATSU (generally the controlling ATSU) to another ATSU (generally the receiving ATSU) to provide the required information necessary to establish CPDLC and/or ADS-C connections with FANS equipped aircraft and thus reduce the number of air-ground messages required to affect the transfer.

4.7.4.2 Message Format.

ATS Field	Description
3	Message type
7	Aircraft identification
13	Departure aerodrome
16	Destination aerodrome
Text	Application data as described below

4.7.4.3 Receipt or transmission of a FAN message does not change the coordination state of the flight.

4.7.4.4 Application data field.

4.7.4.4.1 Application data field is a free text field used in the FAN message to permit the transfer of FANS logon information from one ATSU to another. This field contains a number of elements which are separated by a "/" character. The abbreviation used for the identifier corresponds to the associated ICAO abbreviation (where one exists)/ otherwise the three

character MTI (Message Type Identifier) contained in the logon is used (refer to ARINC 622 for a listing of various MTIs)

4.7.4.4.2 The order of the elements within the FAN message is the order that they are listed below, with consecutive elements being separated by a single <space> character. Although some elements within the Application data field may be "optional", they should be included if the corresponding data is available (i.e. if the ATSU transmitting the FAN message has received this information either from a logon or a FAN message). This is for the benefit of downstream ATSUs that may use the information within these optional elements. If data is not available for an optional element, that element is not to be included in the FAN message.

4.7.4.4.3 Additional information concerning the elements described below is contained in Chapter 7, *Implementation Guidance Material*.

4.7.4.5 Standard message identifier (SMI)

4.7.4.5.1 This mandatory element is preceded by the identifier 'SMI', and contains information relating to the address uplink messages are routed to in the avionics. The value of the SMI sent in the FAN message is the downlink SMI as it was received in either the most recently received logon or FAN message.

4.7.4.5.2 Allowable values for the SMI are listed in ARINC 620. Examples of SMIs include "FML", "FMR", "FMD", FM3" and "AFD".

Example

SMI/FMD

4.7.4.6 Aircraft identification

4.7.4.6.1 This mandatory element is preceded by the identifier 'FMH' and contains the aircraft identification as it was received in either the most recently received logon or FAN message.

Example

FMH/MAS123

4.7.4.7 Aircraft registration

4.7.4.7.1 This mandatory element is preceded by the identifier 'REG' and contains the registration details of the aircraft – including the hyphen if applicable – as it was received in either the most recently received logon or FAN message.

Example

REG/N12345
REG/9V-ABC

4.7.4.8 Aircraft Address (ICAO 24 bit code)

4.7.4.8.1 This optional element is preceded by the identifier 'CODE' and contains the six character hexadecimal translation of the 24 bit aircraft address as it was received in either the most recently received logon or FAN message.

Example

CODE/ABC123

4.7.4.9 Aircraft position information

4.7.4.9.1 This optional element is preceded by the identifier 'FPO' and contains the position of the aircraft as determined by the ATSU at the time of transmission of the FAN message, if this information is available. The position of the aircraft is expressed as a latitude/longitude in either dd[NS]ddd[EW] or ddmm[NS]dddmm[EW] format.

Example

FPO/23S150E
FPO/0823N11025E

4.7.4.10ATS Application and Version Number

4.7.4.10.1 There will usually be multiple elements associated with the ATS Application and Version number (i.e. CPDLC and ADS-C). Occurrences of this element are preceded by the identifier 'FCO' which describes the ATS data link application(s) available in the avionics, as they were received in a logon or a previously received FAN message. The FAN message must include at least one ATS data link application – a separate identifier is used for each available application. These elements may be transmitted in any order.

4.7.4.10.2 The value associated with FCO identifier consists of three letters to describe the application name immediately followed by (i.e. with no intervening spaces) two numeric characters to represent the associated version number. Possible values for the three letters are "ATC" (for CPDLC) or "ADS" (for ADS-C), and the possible range of version numbers is 01 to 99.

Example

FCO/ATC01 FCO/ADS01
FCO/ADS01

4.7.4.10.3 The second example illustrates a FAN message with ADS-C application only. This may be either because the aircraft is not CPDLC equipped, or because the FAN is being used with an adjacent ATSU to enable monitoring using ADS-C by that ATSU when the aircraft is only entering the Area of Common Interest (ACI).

Example

(FAN-ACA870-CYUL-LFPG-SMI/AFD FMH/ACA870 REG/C-GOJA FPO/53N035W FCO/ATC01 FCO/ADS01)

(FAN-UAL951-EBBR-KIAD-SMI/FML FMH/UAL951 REG/N123UA CODE/A254B3 FCO/ADS01)

(FAN-QFA43-YSSY-NZAA-SMI/AFD FMH/QFA43 REG/VH-OJA FPO/34S158E FCO/ATC01 FCO/ADS01)

FAN-ANZ123-NZAA-KLAX-SMI/FML FMH/ANZ123 REG/ZK-NJP FCO/ADS01

(FAN-SIA221-WSSS-YSSY-SMI/FMD FMH/SIA221 REG/9M-MRP CODE/A254B3 FPO/1214S11223E FCO/ATC01 FCO/ADS01)

4.7.4.10.4 ATSUs should ensure that at least two of the ACID, REG, or CODE elements are used to ensure that the logon information contained in the FAN message is associated with the correct flight data record.

Note 1. If the FAN message contains information for the purpose of the next unit establishing a CPDLC connection, is should not be sent until after an appropriate CPDLC Next Data Authority message (NDA) has been transmitted to the aircraft, either allowing a

reasonable time for delivery of the NDA message or waiting for a MAS/S message to be received in response.

Note 2. Where an aircraft enters an adjacent ATSU's ACI but does not actually enter the ATSU's airspace and a FAN message is sent to the adjacent ATSU to enable monitoring using ADS-C then the FCO identifier for the CPDLC application should not be included.

4.7.5 FCN (FANS COMPLETION NOTIFICATION)

4.7.5.1 Purpose.

4.7.5.1.1 The FCN may be transmitted by either the transferring or receiving ATSU to provide information concerning the CPDLC Connection status of the aircraft. It is transmitted by the transferring ATSU when their CPDLC Connection with the aircraft is terminated, providing notification to the receiving ATSU that they are the CPDLC Current Data Authority. It may also be transmitted by the receiving ATSU to provide notification of the establishment of a CPDLC Connection or a failure of a CPDLC Connection request.

4.7.5.2 Receipt or transmission of an FCN message does not change the coordination state of the flight.

4.7.5.3 An FCN transmitted by the receiving ATSU may also (optionally) include contact/monitor frequency information to be issued to the aircraft by the transferring ATSU.

4.7.5.4 Message Format.

ATS Field	Description
3	Message type
7	Aircraft identification
13	Departure aerodrome
16	Destination aerodrome
18	Field 18 in the FCN message is used for the purpose of transmitting two sub-fields; the CPDLC connection identifier and the frequency identifier, both of which are described below
Text	Communication Status as described below

4.7.5.5 Communication Status field.

4.7.5.5.1 Communication Status is a free text field used in the FCN message to permit the transfer of CPDLC connection status and (optionally) frequency information from one ATSU to another. This field may contain a number of elements which are described below. Each element consists of an "identifier" and a value which are separated by a "/" character. Separate elements are separated by a single < space> character.

4.7.5.6 CPDLC Connection Status identifier (CPD)

4.7.5.6.1 This mandatory element is preceded by the identifier "CPD" and contains a single Integer value which is used to provide information concerning an aircraft's CPDLC Connection status. The value to be included in the CPDLC Connection Status field is determined from the following table.

Table 4-2. CPDCL Connection Status

CPDLC Connection Status		**Meaning**
FCN sent by	FCN sent by	

transferring ATSU	receiving ATSU	
0		The CPDLC Connection with the aircraft has been terminated
	0	No CPDLC Connection could be established with the aircraft
	1	The CPDLC Connection Request failed due to the receiving ATSU not being the nominated CPDLC Next Data Authority
	2	A CPDLC Connection has been established with the aircraft

4.7.5.7 Frequency identifier (FREQ)

4.7.5.7.1 This optional element is preceded by the identifier "FREQ" and may be included in an FCN message transmitted by the receiving ATSU to advise of any changes to a previously notified (or a default) frequency. The FREQ/ identifier provides advice to the transferring ATSU of the voice frequency to be transmitted to the aircraft in the CPDLC Contact/Monitor instruction. If no frequency information is to be transmitted this element should not be included in the FCN message.

4.7.5.7.2 When transmitted in the FCN message, the frequency variable does not contain units, spaces or leading zeroes. It may be up to 7 characters in length, containing integers or a decimal point selected from the frequency range below.

Table 4-3. Frequency Identifier

	Range	**Units**
HF	2850 to 28000	kHz
VHF	117.975 to 137.000	MHz
UHF	225.000 to 399.975	MHz

Example

FCN transmitted by receiving ATSU:

(FCN-SIA221-YSSY-WSSS-CPD/0)
The CPDLC Connection request for SIA221 failed

(FCN-ANZ15-KLAX-NZAA-CPD/2 FREQ/13261)
The CPDLC Connection request for ANZ15 was successful. Contact/Monitor voice frequency is 13261

FCN transmitted by transferring ATSU:

(FCN-ICE615-BIKF-KJFK-CPD/0)
The CPDLC Connection with ICE615 has been terminated

4.8 Surveillance data transfer service messages

4.8.1 ADS (SURVEILLANCE ADS-C)

4.8.1.1 Purpose.

4.8.1.1.1 Used to transfer information contained in an ADS-C report from one ATSU to another.

4.8.1.2 Message Format.

ATS Field	Description
3	Message type
7	Aircraft identification
13	Departure aerodrome
16	Destination aerodrome
Text	ADS-C Data

4.8.1.3 ADS-C data field.

4.8.1.3.1 ADS-C data is a free text field used in the ADS message to permit the transfer of information contained in an ADS-C report from one ATSU to another. The data field consists of an identifier (“ADS”) followed by a delimiter “/” character, followed by a text string containing specific text extracted from the encoded ACARS ADS-C report received from the aircraft.

4.8.1.3.2 The ADS-C data field may also be used to indicate that no further ADS messages will be sent to the receiving ATSU for the flight. To indicate this state the ADS identifier is followed by a delimiter “/” character, followed by a “0” (zero). The trigger would be by bilateral agreement (e.g. an ADS-C report has been received that places the aircraft outside the ACI and the predicted route group indicates that the aircraft will not re-enter the ACI).

4.8.1.3.3 The specific text to be included in the AIDC ADS message is described in Chapter 7 – *Implementation Guidance Material*.

Example

(ADS-ANZ90-RJAA-NZAA-ADS/.ZK-OKC030007FF946B6F6DC8FC044
B9D0DFC013B80DA88FC0A64F9E4438B4AC8FC000E34D0EDC0001014
0F3E86)

(ADS-ANZ90-RJAA-NZAA-ADS/0)

Table 4-4. PAN AIDC Messages and their Field Composition

CORE	OPT	MESSAGE	MESSAGE ACRONYM	ICAO FIELDS											NON-ICAO FIELDS
				3a	7a	8ab	9abc	10ab	13a	14abcde	15abc	16a	18	22	
X		Advance Boundary Information	ABI	X	X				X	X		X		X 8,9,10,15,18,Text	
X		Current Flight Plan	CPL	X	X	X	X	X	X	X	X	X	X		
X		Coordination Estimate	EST	X	X				X	X		X			
X		Coordination Cancellation	MAC	X	X				X			X		X 14,18	
	X	PreActivation	PAC	X	X				X	X		X		X 8,9,10,15,18	
X		Coordination Negotiation	CDN	X	X				X			X		X 10,14,15,18,Text	
X		Acceptance	ACP	X	X				X			X			
X		Rejection	REJ	X	X				X			X			
	X	Track Update	TRU	X	X				X			X			X
X		Transfer of Control	TOC	X	X				X			X			
X		Assumption of Control	AOC	X	X				X			X			

CORE	OPT	MESSAGE	MESSAGE ACRONYM	ICAO FIELDS											NON-ICAO FIELDS
				3a	7a	8ab	9abc	10ab	13a	14abcde	15abc	16a	18	22	
X		Emergency	EMG	X	X								X		
X		Miscellaneous	MIS	X	X								X		
	X	Track Definition Message	TDM	X											X
X		Organized Tracks	NAT	X	X										X
X		Logical Acknowledgement Message	LAM	X											
X		Logical Rejection Message	LRM	X									X		
X	X	Application Status Monitor	ASM	X											
X	X	FANS Application Message	FAN	X	X				X			X			X
X	X	FANS Completion Notification	FCN	X	X				X			X	X		X
	X	Surveillance ADS-C	ADS	X	X				X			X			X

Chapter 5. Error Codes

5.1 Introduction

5.11 A set of error codes has been developed for those messages contained in the AIDC message set. A list of the codes, associated field number and error text is contained in the table below. This information is for the inclusion in any Logical Rejection Message transmitted in response to the reception of an AIDC message containing an error.

5.12 Error codes for incorrect message sequences, such as attempting a change in coordination conditions (CDN) while a transfer of control is in progress (TOC) have not yet been developed.

Table 5-1. Error Codes

Error Code	Field Number	Error Text
1	HEADER	INVALID SENDING UNIT (e.g. AFTN Address)
2	HEADER	INVALID RECEIVING UNIT (e.g. AFTN Address)
3	HEADER	INVALID TIME STAMP
4	HEADER	INVALID MESSAGE ID
5	HEADER	INVALID REFERENCE ID
6	7	INVALID ACID
7	7	DUPLICATE ACID
8	7	UNKNOWN FUNCTIONAL ADDRESS
9	7	INVALID SSR MODE
10	7	INVALID SSR CODE
11	8	INVALID FLIGHT RULES
12	8	INVALID FLIGHT TYPE
13	9	INVALID AIRCRAFT MODEL
14	9	INVALID WAKE TURBULENCE CATEGORY
15	10	INVALID CNA CNS EQUIPMENT DESIGNATOR
16	10	INVALID SSR EQUIPMENT DESIGNATOR
17	13,16,17	INVALID AERODROME DESIGNATOR
18	13	INVALID DEPARTURE AERODROME
19	16	INVALID DESTINATION AERODROME
20	17	INVALID ARRIVAL AERODROME
21	13,16,17	EXPECTED TIME DESIGNATOR NOT FOUND

Error Code	Field Number	Error Text
22	13,16,17	TIME DESIGNATOR PRESENT WHEN NOT EXPECTED
23	13,14,16,17	INVALID TIME DESIGNATOR
24	13,14,16,17	MISSING TIME DESIGNATOR
25	14	INVALID BOUNDARY POINT DESIGNATOR
26	14,15	INVALID EN ROUTE POINT
27	14,15	INVALID LAT/LON DESIGNATOR
28	14,15	INVALID NAVAID FIX
29	14,15	INVALID LEVEL DESIGNATOR
30	14,15	MISSING LEVEL DESIGNATOR
31	14	INVALID SUPPLEMENTARY CROSSING DATA
32	14	INVALID SUPPLEMENTARY CROSSING LEVEL
33	14	MISSING SUPPLEMENTARY CROSSING LEVEL
34	14	INVALID CROSSING CONDITION
35	14	MISSING CROSSING CONDITION
36	15	INVALID SPEED/LEVEL DESIGNATOR
37	15	MISSING SPEED/LEVEL DESIGNATOR
38	15	INVALID SPEED DESIGNATOR
39	15	MISSING SPEED DESIGNATOR
40	15	INVALID ROUTE ELEMENT DESIGNATOR
41	15	INVALID ATS ROUTE/SIGNIFICANT POINT DESIGNATOR
42	15	INVALID ATS ROUTE DESIGNATOR
43	15	INVALID SIGNIFICANT POINT DESIGNATOR
44	15	FLIGHT RULES INDICATOR DOES NOT FOLLOW SIGNIFICANT POINT
45	15	ADDITIONAL DATA FOLLOWS TRUNCATION INDICATOR
46	15	INCORRECT CRUISE CLIMB FORMAT
47	15	CONFLICTING DIRECTION
48	18	INVALID OTHER INFORMATION ELEMENT
49	19	INVALID SUPPLEMENTARY INFORMATION ELEMENT

Error Code	Field Number	Error Text
50	22	INVALID AMENDMENT FIELD DATA
51		MISSING FIELD nn (See Note 2) INVALID AMENDMENT FIELD DATA
52		MORE THAN ONE FIELD MISSING
53		MESSAGE LOGICALLY TOO LONG
54		SYNTAX ERROR IN FIELD nn (See Note 2)
55		INVALID MESSAGE LENGTH
56		USE APPROPRIATE ERROR
57		INVALID MESSAGE
58		MISSING PARENTHESIS
59		MESSAGE NOT APPLICABLE TO zzzz OAC (See Note 2)
60	3	INVALID MESSAGE MNEMONIC (i.e., 3 LETTER IDENTIFIER)
61	Header	INVALID CRC
62-71		RESERVED FOR FUTURE USE
62		UNDEFINED ERROR
63		MSG SEQUENCE ERROR: ABI IGNORED
64		MSG SEQUENCE ERROR: INITIAL COORDINATION NOT PERFORMED
65		MESSAGE SEQUENCE ERROR: EXPECTING MSG xxx; RECEIVED MSGyyy (See Note 2)
66	14	INVALID BLOCK LEVEL
67	14	INVALID OFF-TRACK CLEARANCE TYPE
68	14	INVALID OFF-TRACK DIRECTION
69	14	INVALID OFF-TRACK DISTANCE
70	14	INVALID MACH NUMBER QUALIFIER
71	14	INVALID MACH NUMBER
72	ADF (See Note ~~1~~ 3)	INVALID IDENTIFIER
73	ADF (See Note ~~1~~ 3)	INVALID SMI
74	ADF (See Note ~~1~~ 3)	INVALID ACID IN FMH/IDENTIFIER
75	ADF (See Note ~~1~~ 3)	INVALID REGISTRATION IN REG/IDENTIFIER
76	ADF (See Note ~~1~~ 3)	INVALID AIRCRAFT ADDRESS IN CODE/IDENTIFIER

Error Code	Field Number	Error Text
77	ADF (See Note ~~1~~ 3)	INVALID LOCATION IN FPO/IDENTIFIER
78	ADF (See Note ~~1~~ 3)	INVALID DATA LINK APPLICATION FCO/IDENTIFIER
79	ADF (See Note ~~1~~ 3)	INVALID OR UNSUPPORTED CPDLC VERSION NUMBER
80	ADF (See Note ~~1~~ 3)	INVALID OR UNSUPPORTED ADS-C VERSION NUMBER
81	ADF (See Note ~~1~~ 3)	INVALID IDENTIFIER IN FAN MESSAGE
82	CSF (See Note 4) 18	INVALID CPDLC CONNECTION STATUS
83	CSF (See Note 4) 18	INVALID FREQUENCY IN FREQ/IDENTIFIER
84-255		RESERVED FOR FUTURE USE
84	ADF (See Note 5)	INVALID IDENTIFIER IN ADS MESSAGE
85	ADF (See Note 5)	INVALID DATA IN ADS MESSAGE **Note.** This error message refers to the encoded ADS-C data (e.g. if it contains non-hexadecimal characters), rather than whether the contents of the decoded ADS-C report itself are valid
86	TDF (See Note 6)	INVALID IDENTIFIER IN TRU MESSAGE
87	TDF (See Note 6)	INVALID HEADING IN HDG/IDENTIFIER
88	TDF (See Note 6)	INVALID POSITION IN DCT/IDENTIFIER
89	TDF (See Note 6)	INVALID OFF TRACK DEVIATION IN OTD/IDENTIFIER
90	TDF (See Note 6)	INVALID FLIGHT LEVEL IN CFL/IDENTIFIER
91	TDF (See Note 6)	INVALID SPEED IN SPD/IDENTIFIER
92-256		RESERVED FOR FUTURE USE

Note 1. It is not intended that any amplifying text contained in parenthesis "(i.e., AFTN Address)" within the error text column be transmitted in any LRM.

Note 2. The intention is that in error codes 51, 54, 59, and 65 that lower case text (e.g. "nn", or "xxx") is replaced by the applicable value when this information is available.

Note 3. In the FAN message, the "ADF" field number refers to the Application data field.

Note 4. In the FCN message, the "CSF" field number refers to the Communication Status field.

Note 5. In the ADS message, the "ADF" field refers to the ADS-C data field.

Note 6. In the TRU message, the “TDF” field refers to the Track data field.

Chapter 6. ATM Application Naming Conventions

6.1 Introduction

6.11 Eight character AFTN addresses will be used by the AIDC application to identify automated ATS end-systems. The first four characters identify the ATS unit location, while the last four characters identify an organization, end-system, or application process at the given location.

6.12 The table below describes a proposed naming convention, developed by the ATN Panel for identifying ATM end-systems and applications. The last (eighth) character of the end-system's or application's AFTN address should be selected in accordance with Table 6-1.

Table 6-1. Proposed ATM Application Naming Convention

8th character	ATM ground system application process
A	Air space management
B	Unassigned
C	Unassigned
D	Dynamic track generation
E	Unassigned
F	Flight data processing (processor routes to appropriate control sector based on internal configuration information).
G	Reserved for State use
H	Reserved for State use
I	Reserved for State use
J	Reserved for State use
K	Reserved for State use
L	Reserved for State use
M	OPMET data bank
N	AIS data bank
O	Oceanic data processing
P	Unassigned
Q	Unassigned
R	Radar data processing (processor routes to appropriate control sector based on internal configuration information).
S	System management
T	Air traffic flow management

8th character	ATM ground system application process
U	Unassigned
V	Unassigned
W	Unassigned
X	Default value
Y	Service function
Z	Unassigned

Chapter 7. Implementation Guidance Material

7.1 Introduction

7.11 The AIDC Message set described in ~~Appendix A of the ASIA/PAC Regional Interface Control Document (ICD)~~ Chapter 4, *ATS Coordination Messages*, supports five six ATS-related functions.

1. Notification;
2. Coordination;
3. Transfer of Control;
4. General (Text) Information Interchange;
5. Surveillance Data Transfer; and
6. Application Management (Data and Communications Integrity Monitoring).

7.12 The PAN ICD provides detailed information on the structure of these messages. This chapter contains Implementation Guidance Material (IGM) of an explanatory nature. Information on how the message set as a whole is intended to be used is provided, with particular emphasis on the first three functions. The objective is to provide useful information and guidance to software engineers responsible for implementing the AIDC Message set within an automated ATS system.

7.13 Although outside the scope of the ICD, Flight Planning messages play an important role within the region, and will continue to do so in the future.

7.2 Preliminaries

7.21 Assumptions.

7.21.1 The following assumptions have been made:

7.21.1.1 The IGM applies only to those portions of a flight operating within the APAC/NAT Regions;

7.21.1.2 The material described below applies only to data transfers between two automated ATS systems. Though most of it also applies to the general case of Notification and Coordination between more than two automated ATS systems, certain multi-ATSU Coordination problems have not yet been solved;

7.21.1.3 It must be possible to revert to manual intervention of the Notification, Coordination, and Transfer of Control processes at any time;

7.21.1.4 Exceptional conditions, such as loss of communications between two ATSUs are not addressed and are subject to local procedures and,

7.21.1.5 An ATSU's Area of Common Interest (ACI) is defined as the airspace for which the ATSU is responsible, i.e., an FIR, and surrounding border regions just outside the FIR. These surrounding border regions are usually determined by the required separation minima.

7.22 AFTN message header.

7.22.1 Every message transmitted shall contain an AFTN header, as specified in Chapter 3, *Communications and Support Mechanisms*. This header shall contain the optional AFTN data fields described in Chapter 3.

7.22.2 Message identifier numbers (AFTN optional data field 2) shall be sequential. Receipt of an out of sequence message shall result in a warning being issued.

7.22.3 A check for duplicate message identifier numbers shall be made. In general, since 1,000,000 numbers are available, no duplicates should be present.

7.22.4 Message identifier numbers shall begin at 0, proceed through 999,999, and then rollover to 0. The same sequence shall be repeated when necessary.

7.22.5 Each unique ATSU-to-ATSU interface shall select message identifier numbers from its own pool of numbers. Each pool shall encompass the entire possible range, i.e., include all numbers from 0 to 999,999.

7.23 Response messages.

7.23.1 Application response.

7.23.1.1 Every AIDC message received by an ATSU, except a LAM or LRM, shall be responded to with a LAM or LRM. While no LAM is generated for a valid LRM, an ATSU may choose to respond to an invalid LRM with an LRM. Such a response is termed an Application Response, and is generated automatically by the automation system. A LAM shall be transmitted when the receiving automation system found the received message to be syntactically correct and the message data was accepted for further processing or presentation. Otherwise, an LRM message shall be transmitted. Every message possessing an associated message identification number (other than an LAM or LRM) must be responded to by the addressee with an (1) LAM if the message was processed and no errors were found by the receiving Air Traffic Control (ATC) application; otherwise an (2) LRM if the message was not accepted due to errors.

7.23.1.2 The time out value T_{alarm} associated with an application response shall be 180 seconds, corresponding to the nominal value associated with the accountability timer described in Chapter 3, *Communications and Support Mechanisms*, para 3.22.2.

7.23.1.3 Failure to receive an expected application response (i.e. a LAM or LRM) within T_r seconds ($\leq T_{alarm}$) shall result in a re-transmission (up to a maximum number N_r) of the original message, using the same information contained in optional data fields 2 and 3 found in the original message header. The timeout timer T_r shall be reset upon re-transmission. Failure to receive an application response within T_{alarm} seconds from the original transmission of the message shall result in a warning being issued.

7.23.1.4 The transmission of a LAM or LRM shall be triggered by the ATC application process, not the communications process. This is because an application response LAM and LRM messages indicates that the received message was examined by the ATC application process(s), not just the communications functions. Note the distinction between an ATC application process, which implements a critical ATC function such as Coordination or Transfer of Control and a communications process which is responsible for the reliable delivery of data, but not data interpretation. This approach conforms to the OSI Reference Model.

7.23.1.5 Receipt of an LRM shall cause the receiving ATSU to take a corrective action before re-transmitting the message. This action may be automatic, as in a CRC error being indicated, or manual as in an incorrect route element format. Once this action has been taken, the message shall be re-transmitted with a new message identifier number.

7.23.2 Operational response.

7.23.2.1 Several AIDC messages require a response, in addition to the normal application response by another AIDC message. Such a response is termed an Operational Response. Table 7-1 below indicates the required response to a received message. AIDC messages not listed in Table 7-1 have no operational response.

Table 7-1. Required Operational Response

Received Message	Required Operational Response
CPL	ACP or CDN
EST	ACP
PAC	ACP
CDN	ACP, CDN, or REJ
TOC	AOC

7.23.2.2 An REJ is not available in an Initial Coordination Dialogue initiated by a CPL, EST or PAC. An REJ is only available in a CDN dialogue.

7.23.2.3 Failure to receive a response within an adapted operational response timeout period T_{op} shall result in a warning being issued.

7.23.2.4 The value of T_{op} is dependent on whether manual processing is required to generate the operational response. In general, T_{op} should be less than 600 seconds when a manual action is required to trigger the operational response.

7.23.2.5 An operational response shall employ the AFTN header optional data field 3 to reference the original message being responded to. A coordination dialogue which is initiated by one message and contains a sequence of message exchanges until terminated by an ACP or REJ shall always reference the original message which triggered the dialogue. For example, one ATSU may initiate a coordination dialogue by transmitting a CPL message to an adjacent ATSU. A sequence of CDN messages may ensue terminated by an ACP message. The CDN and ACP messages would all reference the original CPL message. After completion of the initial coordination dialogue in the preceding example one ATSU may initiate another coordination dialogue by transmitting a CDN message. A sequence of CDN messages may ensue terminated by an ACP message. Messages in this new coordination dialogue would reference the first CDN message in the dialogue.

7.24 Application management.

7.24.1 Application acceptance (LAM), application rejection due to errors (LRM), status monitoring (ASM), and FANS data link connection transfer (FAN and FCN) capabilities are supported.

7.24.2 The ASM message is used to confirm that the ATC application of the receiving ATSU is on-line alive. This message is sent by ATSU A to (adjacent) ATSU B if, after a mutually agreed time, no communication has been received from ATSU B. ATSU B responds, if the ATC application is active and functioning, by sending a LAM to ATSU A. If ATSU A does not receive a response LAM from ATSU B within a specified time, local contingency procedures should be executed. This message would normally be sent automatically, but may be sent manually for testing

purposes. These procedures will include reverting to manual telephonic communications if it is determined a communications link is down. True loss of ATC capabilities at ATS Unit B will require a different response.

7.24.3 The FAN message may be used to transfer a data link aircraft's logon information from one ATSU to another. Implementation of this message obviates the need to utilize the five step "Address Forwarding" process (initiated by the FN_CAD) that was developed for the initial implementation of FANS. The message contains all the information that is required to establish ADS-C and/or CPDLC connections with the aircraft. In the event that only an ADS-C connection will be required, the transferring ATSU should include ADS-C information only. If a FAN message is transmitted containing ADS-C information only, there should be no expectation of receiving an FCN (see below) response. If a FAN message is received containing ADS-C application information only, there should be no attempt to establish a CPDLC connection.

7.24.4 Normally, one FAN message would be sent for each data link transfer per flight. However, when an FCN is received with a communication status field value of (1) indicating the receiving ATSU is not the Next Data Authority the transferring ATSU should send another NDA message to the aircraft and another FAN message to the receiving ATSU to indicate that the NDA has been sent (refer to Figure 7-4). While the second FAN may not be required for address forwarding purposes it does provide the receiving ATSU with a positive indication that another NDA has been sent to the aircraft.

7.24.5 ATSUs implementing the FAN message should consider retaining existing Address Forwarding functionality to be used as a contingency for data link transfers in the event of failure of the ground-ground link.

7.24.6 Similarly to Address Forwarding, the FAN message should be sent at a time parameter prior to the boundary with the next ATSU. This parameter should be in accordance with guidance outlined in the ICAO Global Operational Data Link Document (GOLD). Functionality for the transmission of a FAN message manually by the ATS officer should also be implemented.

7.24.7 Information concerning the identity of the aircraft (i.e. aircraft identification, aircraft address and registration) contained in the Application data field must not be extracted from the flight plan – it must be information that was contained in either the most recently received logon or FAN message.

Note. This requirement only applies to the aircraft identification within the Application data field of the FAN message. The aircraft identification (i.e. ATS Field 7) at the beginning of the FAN message is the identification of the aircraft from the ATS flight plan.

7.24.7.1 When extracting the identity of the aircraft from the logon, the information required is the aircraft identification within the CRC protected portion of the logon – not the flight identifier (FI) that is contained in Line 4 of the ACARS logon message. In the example below, the aircraft identification is **QFA924** rather than the QFO924 contained in Line 4 of the ACARS message.

QU BNECAYA
.QXSXMXS 010019
AFD
FI QF0924/AN VH-EBA
DT QXT POR1 010019 J59A
- AFN/FMH**QFA924**, .VH-EBA,,001902/FPOS33373E150484,0/FCOADS,
01/FCOATC,01292B

7.24.8 Under certain circumstances (e.g. FMC failure) it is possible for the SMI of an aircraft to change in flight, which will require a new logon from the aircraft to permit data link services to continue. To ensure that the next ATSU has up to date information, the SMI transmitted in any FAN message should be the SMI from the most recently received logon or FAN message.

7.24.9 A hyphen within the registration that was contained in either the logon or any previously received FAN message must also be included in the REG element of any transmitted FAN message. Without this hyphen, data link message transmitted by the ATSU may not be delivered to the aircraft.

Note. ATSUs implementing the FAN message must be aware of the possible existence of the hyphen within the registration and that it does not signify a "new field" as is the case with other AIDC messages.

7.24.9.1 Any "padding" in the registration contained in the logon (e.g. preceding periods <.>s) must not be included in the FAN message. In the sample ACARS message above, the registration to be included in the FAN message would be "VH-EBA", not ".VH-EBA".

7.24.10 Some ATSUs may utilise the aircraft position which is an optional field that may be contained in the logon. If the aircraft position information element is to be included in any transmitted FAN message, there is little purpose in simply relaying the aircraft position from the original logon – the calculated position of the aircraft should be used instead.

7.24.11 The FCN message, where used, provides advice to the transferring ATSU that the receiving ATSU has established an (inactive) CPDLC connection with an aircraft. The transmission of an FCN message is triggered by an event such as the termination of a CPDLC Connection by the transferring ATSU, or the establishment of (or failure to establish) a CPDLC Connection by the receiving ATSU. FCN messages should only be transmitted when a CPDLC transfer is being effected – i.e. not for transfers involving aircraft that are only ADS-C equipped.

7.24.12 Multiple FCN messages.

7.24.12.1 The general philosophy for use of the FCN is that only a single FCN message is transmitted by each ATSU for each flight. Under normal conditions, changes in CPDLC status after transmission of an FCN should not result in the transmission of another FCN (an exception to this is when a Connection request fails due to the receiving unit not being the nominated next data authority – see Table 7-2 below).

Table 7-2. FCN Transmission

ATSU transmitting FCN	When an FCN should be sent
Transferring ATSU	On receipt of a Disconnect Request terminating the CPDLC Connection
Receiving ATSU	On receipt of a Connection Confirm, establishing a CPDLC Connection
Receiving ATSU	On receipt of CPDLC downlink DM64 [ICAO facility designation], **Note.** This provides advice to the transferring ATSU to uplink an appropriate Next Data Authority message to the aircraft. And subsequently: On establishment of a CPDLC Connection

Receiving ATSU	Following initial failure of a CPDLC Connection request or a time parameter prior to the FIR boundary, if no CPDLC Connection has yet been established, whichever occurs later

7.24.12.2 Procedures following a change to CPDLC Connectivity following the transmission of an FCN message should be described in local procedures (e.g. voice coordination), rather than by transmission of another FCN message.

7.24.13 Procedures for the notification of changes to the voice frequency after the transmission of an FCN message should be described in local procedures rather than via the transmission of another FCN message.

7.24.14 Sample flight threads involving FAN and FCN messages

7.24.14.1 The following diagrams show typical flight threads involving the FAN and FCN messages. Relevant uplink and downlink messages between the aircraft and the ATSU are also shown.

Figure 7-1. Routine Data Link Transfer Using FAN and FCN Messaging

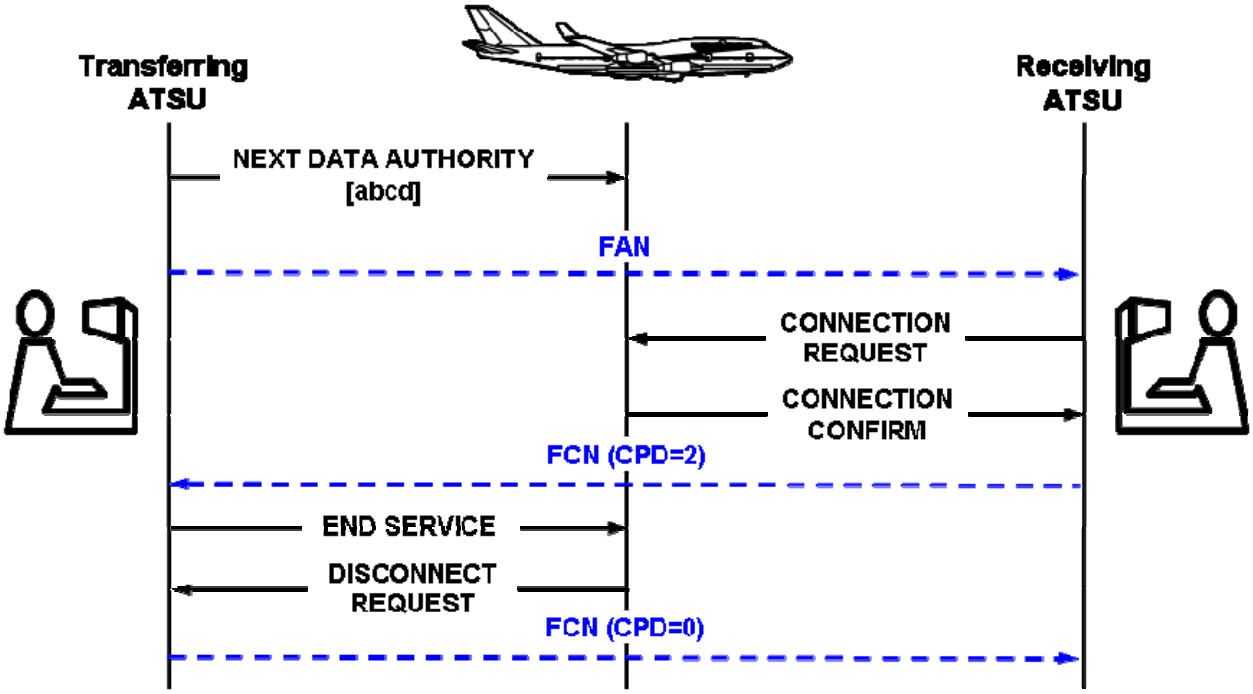

7.24.14.2 Figure 7-1 shows a routine CPDLC transfer from one ATSU to the next. The first step in the transfer process is the uplinking of a CPDLC Next Data Authority message to the aircraft advising the avionics of the next centre that will be communicating with the aircraft via CPDLC. A FAN message is then sent to the next ATSU to provide them with the aircraft's logon information. The receiving ATSU then successfully establishes a CPDLC connection with the aircraft and transmits a 'successful' FCN (CPD = 2) back to the transferring ATSU. On

termination of the CPDLC connection, the transferring ATSU transmits an FCN (CPD = 0) to the receiving ATSU.

Figure 7-2. CPDLC Transfer Using FAN and FCN Messaging – Initial Connection Request Failed

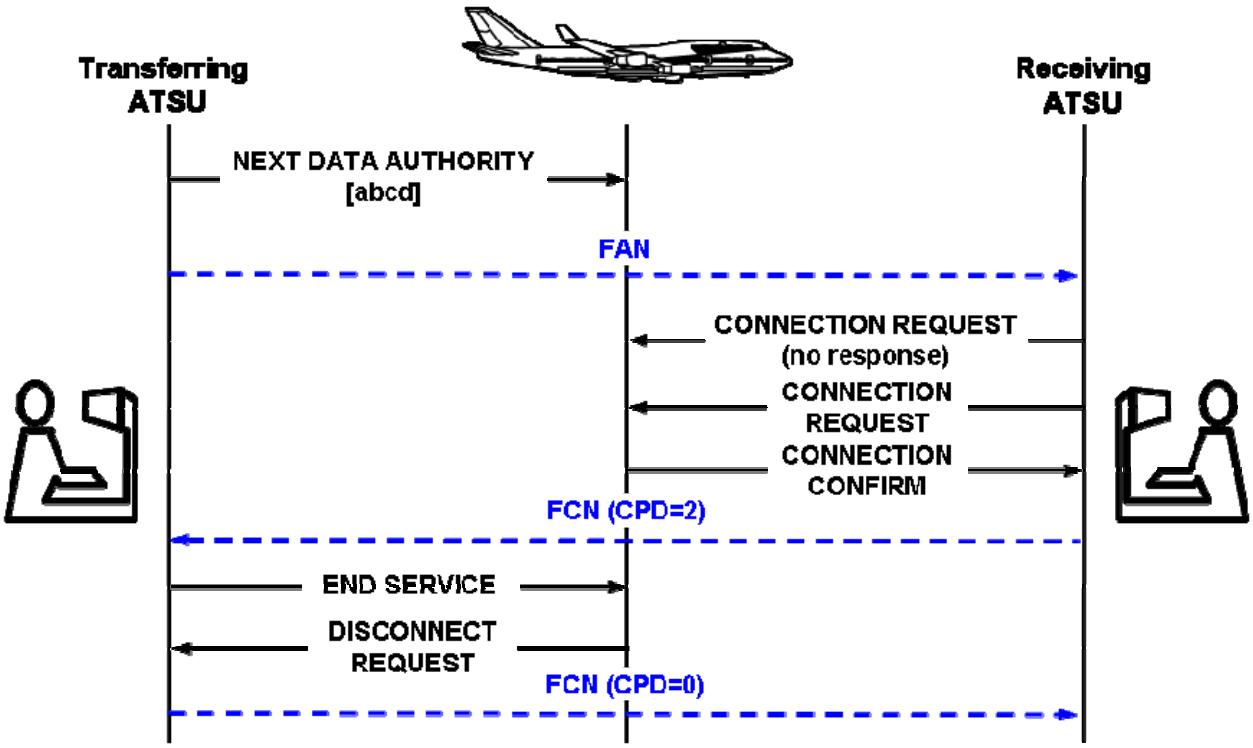

7.24.14.3 Figure 7-2 shows a CPDLC transfer where there is no response by the avionics to the initial Connection Request uplinked by the receiving ATSU. A subsequent Connection Request is uplinked to the aircraft which is successful. Because the CPDLC connection is finally established prior to the 'time out' VSP before the FIR boundary, a successful FCN (CPD=2) is transmitted to the transferring ATSU. On termination of the CPDLC connection, the transferring ATSU transmits an FCN (CPD=0) to the receiving ATSU.

Figure 7-3. CPDLC Transfer Using FAN and FCN Messaging – Unable to Establish CPDLC Connection

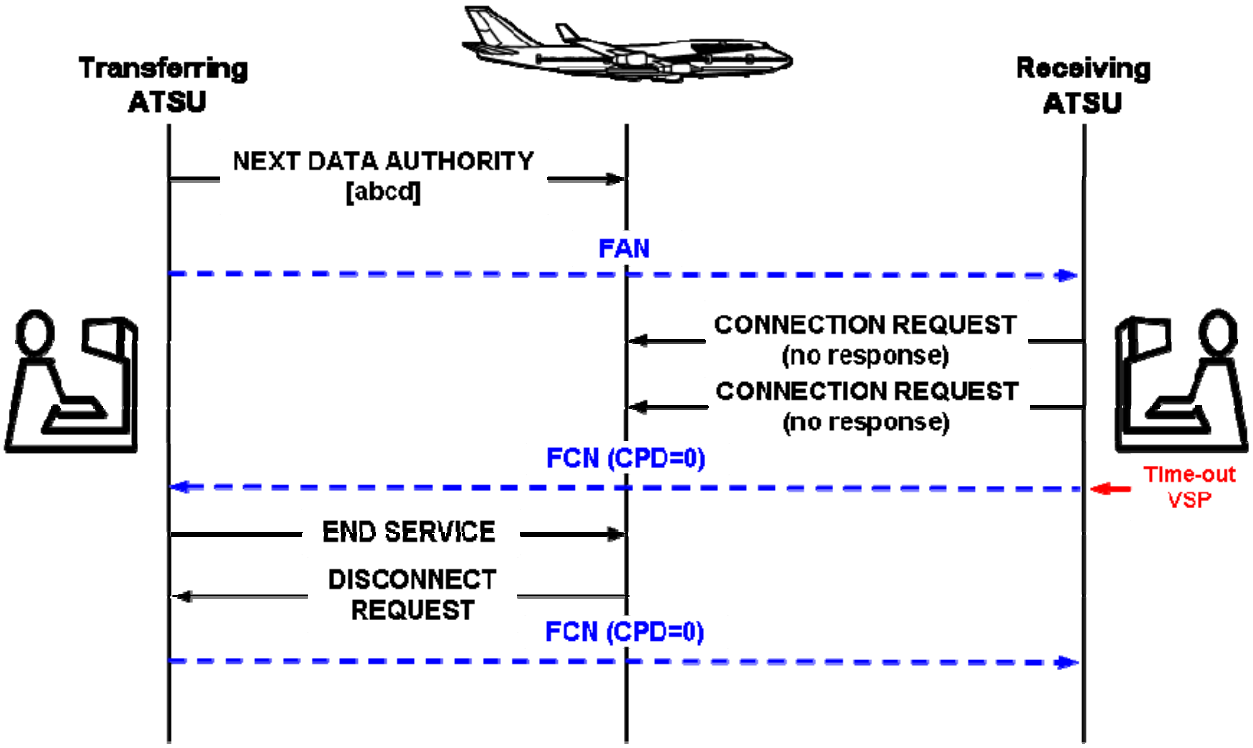

7.24.14.4 Figure 7-3 shows an attempted CPDLC transfer where there is no response by the avionics to multiple CPDLC connection requests uplinked by the receiving ATSU before the 'time out' VSP prior to the FIR boundary. An unsuccessful FCN (CPD=0) is transmitted to the transferring ATSU. Letters of Agreement should describe the procedures to be followed in the event that the receiving ATSU establishes a CPDLC connection after this FCN has been transmitted. Even though the receiving ATSU has advised of their inability to establish a CPDLC connection, the transferring ATSU still transmits an FCN (CPD=0) when their CPDLC connection with the aircraft is terminated.

Figure 7-4. CPDLC Transfer Using FAN and FCN Messaging – Initial NDA not Delivered

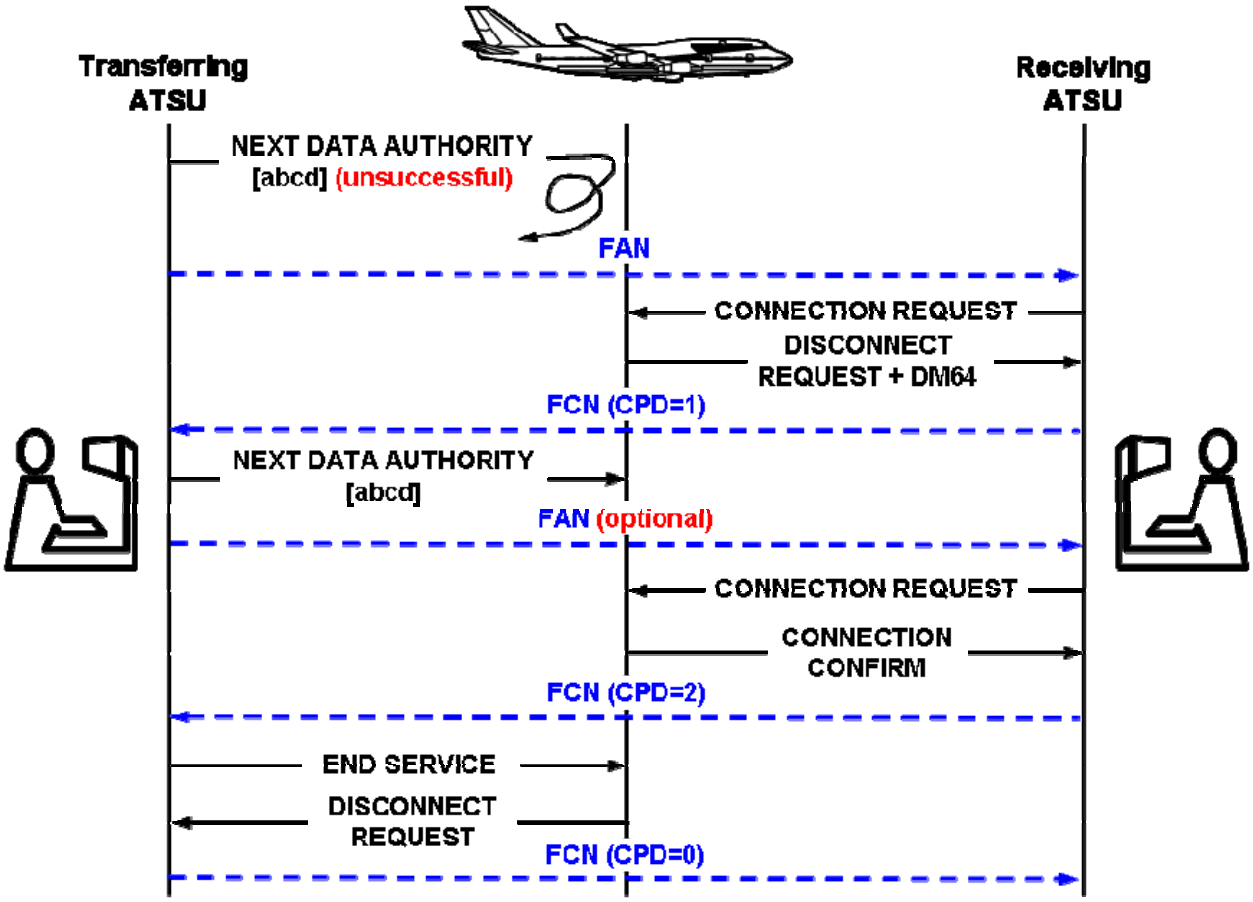

7.24.14.5 Figure 7-4 shows a CPDLC transfer in which the original Next Data Authority message uplinked by the transferring ATSU is not delivered to the aircraft. An FCN (CPD=1) is transmitted by the receiving ATSU advising of the failure of their CPDLC Connection request. Another Next Data Authority message is uplinked to the aircraft. The transferring ATSU may send another FAN message after which the receiving ATSU successfully establishes a CPDLC connection. Because this occurs before the time out VSP prior to the FIR boundary, a successful FCN (CPD=2) is transmitted back to the transferring ATSU. On termination of the CPDLC connection, the transferring ATSU transmits an FCN (CPD=0) to the receiving ATSU.

7.3 Phases of flight

7.31 From an ATSU's perspective, a flight is considered to progress through several phases. The IGM is principally concerned with three phases: Notification, Coordination, and Transfer of Control.

7.32 Notification phase.

7.32.1 An ATSU receives information during the Notification phase on a flight which will at some future time enter its ACI.

7.32.2 Notification dialogue.

7.32.2.1 ABI messages shall be used to transfer notification information. The sending ATSU transmits an ABI to the downstream D-ATSUs (including the next Receiving ATSU – the R-ATSU) with which it must coordinate the flight. The ATSU is responsible for determining which D-ATSUs must be notified.

7.32.3 Re-Route Notification.

7.32.3.1 All D-ATSUs to the destination aerodrome shall be notified when a re-route has been made. Re-route dissemination shall be performed as a minimum capability on a stepwise (i.e. from one D-ATSU to the next D-ATSU) basis. In stepwise dissemination, an ATSU receiving an ABI is responsible for passing it on to any other affected D-ATSUs at the appropriate time.

7.32.4 Route to Destination.

7.32.4.1 The above procedure requires the C-ATSU to acquire the complete route to destination. Initially, this information is found in the route field of the Filed Flight Plan (FPL). As re-routes occur, the filed route must be updated by the C-ATSU, and transmitted to D-ATSUs. In cases where this is not possible, the route field shall be terminated after the last known significant point with the ICAO truncation indicator, which is the letter "T".

7.32.4.2 In accordance with PANS-ATM Doc 4444, the truncation indicator shall only follow a significant point or significant point/Cruising Speed and Cruising Level in Field 15 and shall not follow an ATS route designator.

7.32.5 Re-route to new destination.

7.32.5.1 The procedures described below apply when the notification and coordination of amended destinations has been included in bilateral agreements.

7.32.5.2 If an amendment to the destination aerodrome occurs **prior to** the transmission of the first ABI to an adjacent ATSU:

Field 16 shall contain the original destination of the aircraft; and,

The Amended destination field shall contain the new destination of the aircraft.

7.32.5.3 Subsequent AIDC messages shall contain the new destination in Field 16, without reference to an amended destination.

7.32.5.4 If an amendment to the destination aerodrome occurs **after** the transmission of the first ABI to an adjacent ATSU, but before coordination has occurred, a new ABI shall be transmitted.

Field 16 shall contain the original destination of the aircraft; and,

Amended destination field shall contain the new destination of the aircraft.

7.32.5.5 Subsequent AIDC messages shall contain the new destination in Field 16, without reference to an amended destination.

7.32.5.6 The format of the Amended destination field shall be one of the options described below:

ICAO four-letter location indicator; or

Name of the destination aerodrome, for aerodromes listed in Aeronautical Information Publications; or

Latitude/Longitude in the format dd[NS]ddd[EW] or ddmm[NS]dddmm[EW]; or

Bearing and distance from a significant point, using the following format:

The identification of the significant point, followed by

The bearing from the significantly point in the form of 3 figures giving degrees magnetic, followed by

The distance from the significant point in the form of 3 figures expressing nautical miles.

7.32.6 Notification Cancellation.

7.32.6.1 A notification can be cancelled using a MAC message. Receipt of a MAC by an ATSU means that any notification data previously received for the flight is no longer relevant. Filed flight plan information (and any modifications) shall continue to be held, in accordance with local ATSU procedures.

7.33 Coordination phase.

7.33.1 Coordination between adjacent ATSUs occurs when the flight approaches a shared FIR boundary. An initial coordination dialogue can be automatically initiated a parameter time or distance from the boundary, as documented within a bi-lateral agreement, or it can also be manually initiated. There are several types of coordination dialogues which occur, depending on where the aircraft is and what previous dialogues have occurred.

7.33.2 Initial Coordination Dialogue.

7.33.2.1 This coordination dialogue (or Abbreviated Initial Coordination dialogue) is always required to be successfully completed before later coordination dialogues are initiated. The C-ATSU transmits a CPL to the R-ATSU. The R-ATSU then responds with either an ACP, which signifies acceptance of the coordination conditions contained within the CPL, or a CDN which proposes a modification to the conditions contained in the CPL. If a CDN is the R-ATSU's response to the CPL, a sequence of CDNs may be exchanged between the two ATSUs. This dialogue is eventually terminated by the ATSU which last received a CDN transmitting an ACP to the other ATSU. Transmission of an ACP indicates that coordination conditions are mutually acceptable and an initial coordination has been achieved.

7.33.3 Abbreviated Initial Coordination Dialogue.

7.33.3.1 An Abbreviated Initial Coordination dialogue may be used in place of an Initial Coordination Dialogue when it is known *apriori* (e.g., by letters or agreement) that a flight's coordination data is mutually acceptable to both the C-ATSU and R-ATSU, accurate route information is available at the R-ATSU (e.g., from either an ABI or FPL message), and both ATSUs have agreed to permit the use of this dialogue. The C-ATSU transmits an EST or PAC to the R-ATSU. The R-ATSU then responds with an ACP, which signifies acceptance of the coordination conditions (i.e., boundary crossing data) contained within the EST or PAC. Either this dialogue or a full (i.e., CPL-based) Initial Coordination dialogue shall be successfully completed before any later coordination dialogues are initiated. Note that negotiation via CDNs is not permitted within this dialogue.

7.33.3.2 PAC is only used when coordination is required before departure. This normally only occurs when the FIR boundary is close to the departure airport. PAC signals to the R-ATSU that the departure is imminent as well as initiating coordination.

7.33.4 Re-Negotiation Dialogue.

7.33.4.1 This is an optional dialogue used to propose new coordination conditions after the initial dialogue has been completed. Either ATSU may initiate this dialogue by transmitting a CDN (in contrast to a CPL in the Initial Coordination Dialogue) to the other ATSU. The dialogue then proceeds with an exchange of additional CDNs as necessary. Either ATSU may terminate the dialogue in one of two ways: (1) with an ACP indicating that the coordination proposal contained in the latest CDN is acceptable; or (2) with an REJ indicating that the previously agreed upon coordination conditions remain in effect.

7.33.5 Active CDN.

7.33.5.1 For a given flight, only one CDN may be active between any pair of ATSUs. Note, however, that coordination between more than two ATSUs (for the same flight) may have a total number of active CDNs greater than one, though each pair of ATSUs is still restricted to a maximum of one active CDN per flight. In the exceptional (rare) case where a C-ATSU and D-ATSU both simultaneously transmit CDNs, the C-ATSU shall transmit a REJ to the D-ATSU cancelling the D-ATSU's CDN.

7.33.6 CDNs Are Proposals.

7.33.6.1 Note that CDNs are only proposals; no changes are made in a flight's profile until an ACP is sent and acknowledged.

7.33.6.2 To ensure interoperability between ATSUs when using a CDN to propose a diversion to an alternative destination, the following procedures shall be used:

7.33.6.3 The mandatory Field 16 shall contain the original (i.e., the "current") destination aerodrome. The Amended Destination text field shall contain the amended destination.

7.33.6.4 The format of the Amended destination field shall be one of the options described below:

ICAO four-letter location indicator; or

Name of the destination aerodrome, for aerodromes listed in Aeronautical Information Publications; or

Latitude/longitude in the format dd[NS]ddd{EW] or ddmm[NS]dddmm[EW]; or

Bearing and distance from a significant point using the following format:

The identification of the significant point followed by

The bearing from the significant point in the form of 3 figures giving degrees magnetic followed by

The distance from the significant point in the form of 3 figures expressing nautical miles.

7.33.6.5 The mandatory Field 16 contained in the operational response (ACP, REJ, CDN) to a CDN that proposes an amended destination shall contain the original (i.e. the "current") destination aerodrome.

7.33.6.5.1 Due to the complexities involved with maintaining multiple profiles for "current destination" vs. "amended destination" ATSUs should consider prohibiting (via bilateral agreement) an operational response of CDN in any coordination renegotiation dialogues that contain an amended destination.

7.33.6.6 Provided that the proposed amendment is agreed to, all subsequent AIDC messages concerning this aircraft shall contain the new destination in the mandatory Field 16.

7.33.7 Cleared Flight Profile Update.

7.33.7.1 The cleared flight profile (which is used for control purposes) shall only be updated after successful completion of a coordination dialogue, i.e., an ACP has been sent and acknowledged. This will require temporarily storing a proposed flight profile undergoing coordination separate from the cleared flight profile. The cleared profile shall then be updated using the newly coordinated profile upon successful completion of the coordination dialogue.

7.33.8 Automatic update of coordination conditions.

7.33.8.1 When included in bilateral agreements between ATSUs, changes to previously agreed coordination conditions may be coordinated by way of a TRU message. The intent of this message is to allow amendments to certain elements of an aircraft's clearance to be coordinated to an adjacent ATSU. In contrast to the CDN, there is no operational response to a TRU message – this message is used when there is agreement to what amendments can be made to an aircraft's clearance by the controlling ATSU after initial coordination has occurred without prior coordination.

7.33.8.2 Whilst a number of the elements that may be coordinated by TRU message may be more suited to an environment associated with an ATS Surveillance system (e.g. Heading, Direct to, etc), other elements may be applicable in *any* ATS environment (e.g. Cleared Flight Level, Off track deviation, Speed, etc).

7.33.8.3 The TRU message makes use of the Track data field to provide updated clearance information to an adjacent ATSU. Track data may be used to update assigned heading, assigned level, off track clearance, assigned speed, or 'direct to' information.

7.33.8.4 When using the DCT/[position] element in the TRU message, [position] would normally be located on the flight planned route of the aircraft. Local procedures should specify the actions to be taken in the event that [position] is not on the flight planned route.

7.33.8.5 For the purpose of the TRU message, the format of [position] is one of the following:

From 2 to 5 characters being coded designator assigned to an en-route point or aerodrome; or

ddmm[NS]dddmm[EW]; or

dd[NS]ddd[EW]; or

2 or 3 characters being the coded identification of a navigation aid followed by 3 decimal numerics giving the bearing from the point in degrees magnetic followed by 3 decimal numerics giving the distance from the point in nautical mile.

7.33.9 Coordination Cancellation.

7.33.9.1 Coordination can be cancelled using a MAC message. Receipt of a MAC by an ATSU means that any coordination (or notification) data previously received for that flight is no longer relevant. Filed flight plan information (and any modification) shall continue to be held in accordance with local ATSU procedures.

7.33.10 Coordination and the ACI.

7.33.10.1 ATSU A may need to coordinate with or provide information to ATSU B on all aircraft that enter ACI B, even if they do not enter FIR B. Consider the case of aircraft A in FIR A and aircraft B in FIR B, both flying near the FIR A – FIR B boundary, but never penetrating the other FIR's airspace. The maintenance of adequate separation between these two aircraft may require coordination between or the provision of information to adjoining ATSUs.

7.34 Transfer of control phase.

7.34.1 Transfer Dialogue.

7.34.1.1 This phase occurs when the C-ATSU is ready to relinquish control of the flight to the R-ATSU normally just before the FIR boundary crossing. The C-ATSU transmits a TOC message to the R-ATSU which responds with an AOC message. The R-ATSU then becomes the C-ATSU once an application response for the AOC has been received.

7.34.2 Transfer of Control and the ACI.

7.34.2.1 Note that the Transfer of Control process will not occur for all flights. Some flights fly near an FIR boundary, and may require coordination or the provision of other information, but do not actually enter the FIR.

7.4 Flight state transitions

7.41 Notifying states.

7.41.1 Consider an aircraft that is currently within a NAT/PAC FIR – FIR A – controlled by ATSU A (i.e. the C-ATSU) progressing towards the next FIR, FIR B (i.e. the R-ATSU). The aircraft is several hours from the boundary between the two FIRs. The flight is initially in a Pre-Notifying state from ATSU B's perspective. ATSU B usually will have previously received a Filed Flight Plan (an FPL message) possibly with later amendments (as contained in CHG messages). ATSU A will employ a Notification dialogue to transfer information to ATSU B. (This transfer occurs at either a system parameter time (e.g. 60 minutes), or distance prior to the flight crossing the FIR A – FIR B boundary.) This places the flight in a Notifying state from ATSU B's perspective. Additional Notification dialogues may be invoked by ATSU A as needed to inform ATSU B of flight changes. If the aircraft for some reason, such as a change in route, is no longer expected to penetrate ACI B, ATSU A sends a MAC message to ATSU B causing the flight to be placed back in Pre-Notifying state from ATSU B's perspective.

7.42 Initial coordination states.

7.42.1 An Initial Coordination Dialogue is employed to effect the initial coordination. ATSU A transmits a CPL to ATSU B when the aircraft is at a mutually agreed upon predetermined time (e.g. thirty minutes) or distance (e.g., 60nm) from the FIR A – FIR B boundary. The flight is now in Negotiating state from both ATSU A's and ATSU B's perspectives. ATSU B can accept the conditions specified in the CPL "as is" by transmitting an ACP message to ATSU A, or it can propose modifications using the CDN message. Negotiations between the two ATSUs are carried out using the CDN until a mutually acceptable flight profile is achieved. This acceptance is signaled by one ATSU sending an ACP, as before, to the other ATSU. This establishes the initial coordination conditions. From the perspective of both ATSUs the flight is now in a Coordinated state.

7.42.2 For an Abbreviated Initial Coordination, ATSU A transmits an EST to ATSU B when the aircraft is at a mutually agreed upon predetermined time (e.g. thirty minutes) or distance from FIR A – FIR B boundary. The flight is now in a Coordinating state. ATSU B responds with an ACP which places the flight in a coordinated state. This sequence of messages corresponds to an Abbreviated Initial Coordination Dialogue.

7.43 Re-negotiation states.

7.43.1 The initial coordination is typically the final coordination. However, in certain situations it may be desirable, or necessary to re-open the coordination dialogue after initial coordination has been completed. A Re-Negotiation dialogue is employed to effect profile changes. The dialogue is re-opened when one ATSU (either A or B) transmits a CDN to the other ATSU causing the flight to be in a Re-Negotiating state. The dialogue proceeds as above using CDN messages until either an ACP or REJ is sent. Either ATSU can close the dialogue by transmitting an ACP or REJ. An ACP closes the dialogue with a new mutually agreed upon flight profile. A REJ however, immediately terminates the dialogue with the previously accepted coordination conditions remaining in effect. Any proposed changes are null and void. Transmission of an ACP or REJ places the flight back into the coordinated state.

7.44 Transfer states.

7.44.1 Transfer of control is supported by the Transfer dialogue. Transfer of control conditions are supported by two messages: the TOC and AOC. ATSU A sends a TOC to ATSU B when the aircraft is about to cross the boundary. Alternatively, ATSU A can send a TOC when it is ready to relinquish control even if the aircraft will remain in FIR A airspace several minutes before entering FIR B. The flight is now in a Transferring state from both ATSU A's and ATSU B's perspectives. ATSU B responds by transmitting an AOC to ATSU A signaling acceptance of control responsibility. The flight is now in a Transferred state from ATSU A's perspective.

7.44.2 The aircraft has now entered FIR B, and is under the control of ATS Unit B, progressing towards the next FIR, FIR C. The same process described above is repeated between ATS Units B and C.

7.44.3 No changes to the flight profile may be made while in the border region without mutual agreement between ATS Units A and B. If a flight has entered FIR B, and either ATS Unit A or B desires a change in the coordination conditions, negotiation must occur using CDNs. This negotiation is terminated with either an ACP or REJ.

7.45 Backward re-negotiating state.

7.45.1 A flight's profile may occasionally require changes after Transfer of Control have been completed, but the aircraft is still within ATSU A's ACI. A Re-Negotiating dialogue is employed to effect profile changes after transfer has been completed. This places the flight in a Backward Re-Negotiating State from both ATSU's perspectives. Completion of this dialogue returns the aircraft to the Transferred state.

7.45.2 Several flight states are identified in the above description. These states are listed in Table 7-3.

7.45.3 A flight state transition diagram is shown in Figure 7-5. This diagram depicts graphically how the flight transitions from one state to the next. It can be seen that the AIDC messages act as triggers forcing the necessary state transitions. A description of the allowable flight state transitions along with the message event that triggers the transitions is given in Table 7-4.

Table 7-3. Flight States

Flight State	Description

Pre-Notifying	Flight plan information may have been received. Any previously received notification and coordination information for the given flight cancelled by a MAC is no longer relevant. A flight which was originally going to enter a downstream ATS Units area of responsibility will no longer do so.
Notifying	The aircraft's progress is being monitored by one or more non-controlling ATSUs in addition to the controlling ATSU.
Negotiating	The aircraft is near the ACI and Coordination data is being exchanged between the controlling ATSU and the receiving ATSU as part of the initial coordination dialogue.
Coordinating	Abbreviated coordination data has been sent to the receiving ATSU.
Coordinated	Coordination of the boundary ACI crossing conditions is completed
Re-Negotiating	The aircraft is near the ACI and Coordination data is being exchanged between the controlling ATSU and the receiving ATSU as part of a later coordination dialogue.
Transferring	Air traffic control responsibility for the aircraft is in the process of being transferred to the receiving ATSU.
Transferred	Air traffic control responsibility for the aircraft has been transferred to the receiving ATSU.
Backward Re-Negotiating Backward-Coordinating	The aircraft is now under the control of the receiving ATSU, but still near the boundary. Changes are being proposed to the coordination conditions while the aircraft is still in the vicinity of the boundary ACI.

Figure 7-5. Flight State Transition Diagram

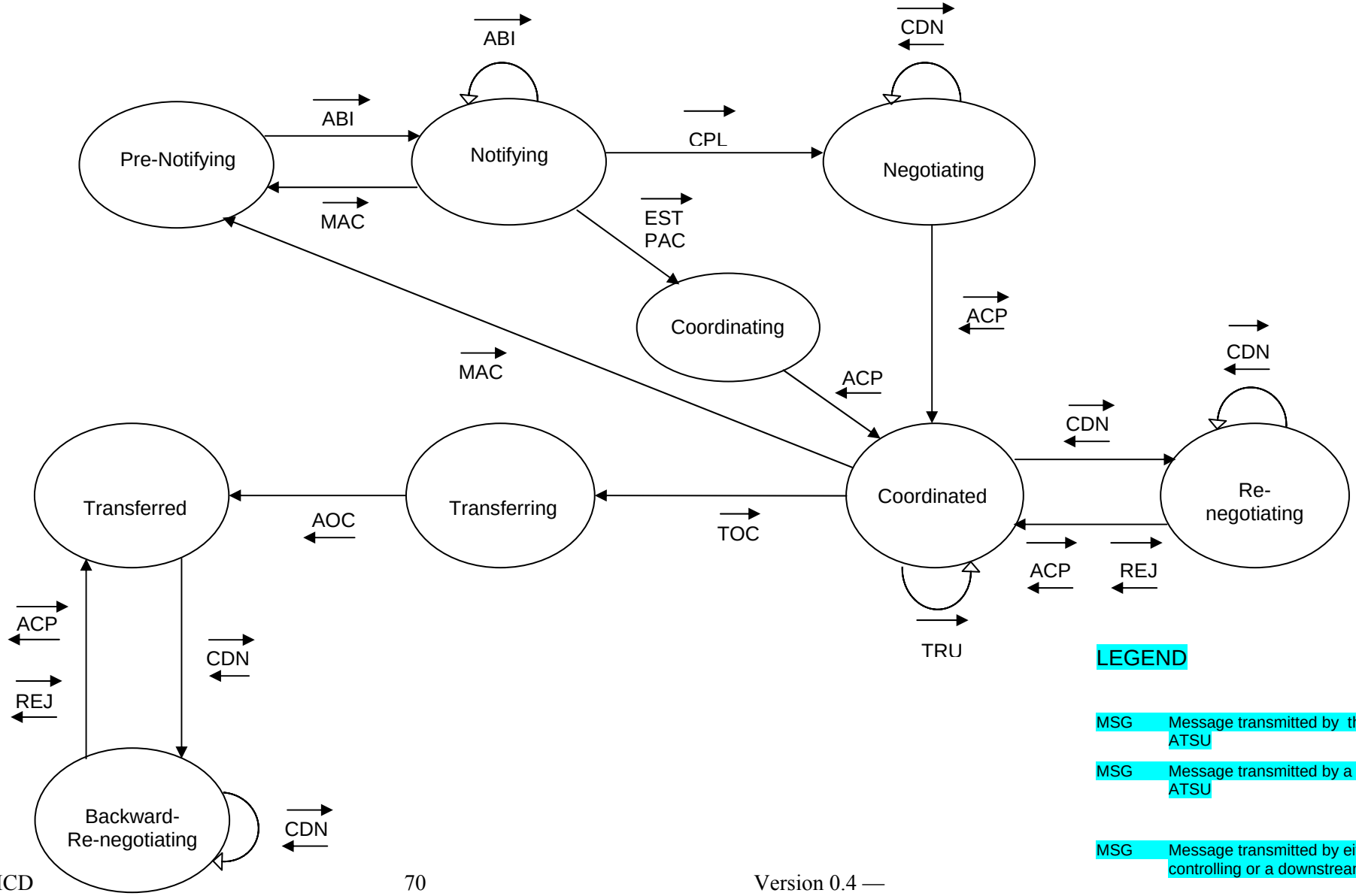

Table 7-4. Flight State Transitions

State Transition	Message Trigger	Description
Pre-Notifying/ Notifying	ABI	An initial ABI begins the Notification phase. An ABI updates the information a downstream ATS Unit maintains on a flight that is expected to enter its ACI at some future time. This data can be sent hours in advance of the actual entry.
Notifying/ Notifying	ABI	An ABI updates the information a downstream ATSU maintains on a flight that is expected to enter its ACI at some future time. This data can be sent hours in advance of the actual entry.
Notifying/ Pre-Notifying	MAC	A flight that was expected to enter a downstream ATSU's ACI will no longer do so.
Notifying/ Negotiating	CPL	A CPL is used to initiate the coordination process for an aircraft that will enter the downstream ATSU's ACI. A CPL contains the current clearance to destination landfall.
Notifying/ Coordinating	EST	An EST is used to initiate an Abbreviated Coordination process for an aircraft that will enter the downstream ATSU's ACI.
Notifying/ Coordinating	PAC	A PAC is used to initiate an Abbreviated Coordination process for an aircraft not yet airborne that will enter the downstream ATSU's ACI.
Negotiating/ Negotiating	CDN	If the downstream ATSU cannot accept the current clearance (and boundary crossing conditions), a Negotiation process is carried out using CDNs.
Negotiating/ Coordinated	ACP	The negotiation process is terminated when one ATSU signals its acceptance of the coordination conditions using an ACP.
Coordinating/ Coordinated	ACP	The Abbreviated Coordination dialogue is terminated by the receiving ATSU transmitting an ACP.
Coordinated/ Re-Negotiating	CDN	The coordination dialogue can be re-opened at any time after the initial coordination and before the initiation of the transfer of control procedure.
Re-Negotiating/ Re-Negotiating	CDN	Either ATSU may attempt to change the previously agreed upon coordination conditions any time after the initial coordination dialogue has been completed.
Re-Negotiating/ Coordinated	ACP REJ	An ACP terminates a re-negotiation dialogue with a new mutually agreed upon profile in effect. An REJ immediately terminates the dialogue with the coordination conditions remaining as previously agreed (which is usually, but not necessarily the initial coordination conditions).

State Transition	Message Trigger	Description
Coordinated/ Coordinated	TRU	A TRU may be sent by the controlling ATSU after the initial coordination dialogue has been completed to update previously agreed coordination conditions.
Coordinated/ Transferring	TOC	A TOC is sent after coordination occurs but (usually just) before the boundary is crossed to the accepting ATSU. The TOC informs the accepting ATSU that it now has control authority for the aircraft
Coordinated/ Pre-Notifying	MAC	A flight that was expected to enter a downstream ATSU's ACI will no longer do so.
Transferring/ Transferred	AOC	The formerly downstream ATSU is now the controlling ATSU.
Transferred/ Backward-Re-Negotiating Transferred/Backward-Coordinating	CDN	An attempt is made (by either the previous or new controlling ATSU) to change the coordination conditions while the aircraft is near the common boundary
Backward-Re-Negotiating/ Backward-Re-Negotiating Backward-Coordinating/Backward-Coordinating	CDN	Either ATSU may propose changes to attempt to change the previously agreed upon coordination conditions any time after transfer of control has been completed, but while the aircraft remains in the common boundary region.
Backward-Re-Negotiating/ Transferred Backward-Coordinating/Transferred	ACP REJ	Similar to a Re-Negotiation/Coordinated state transition. An ACP terminates a backward coordination dialogue with a new mutually agreed upon profile in effect. An REJ immediately terminates the dialogue with the coordination conditions remaining as previously agreed (which is usually, but not necessarily the initial coordination conditions).

7.5 Message sequencing

7.51 The preceding section identified the flight states and showed how the aircraft transitions from on state to the next based on the receipt of AIDC messages by ATSU B. In this section, a table of two-message sequences is constructed as shown in Table 7-5. The sequences identify the allowable messages (the next message column) that may correctly follow a given, just received message (the first column). Application Management Messages LAM and LRM are not shown but must be sent in response to any received Notification, Coordination or Transfer of Control.

Table 7-5. Message Sequences

Received Message	Next Valid Message	Comments
Notification Sequences		
ABI	ABI	Update the flight information.
	MAC	Indicates that the flight is no longer expected to enter the downstream ATSU's ACI. The ABI may be Cancelled, indicating that the flight is no longer expected to enter the downstream air space.
	CPL	Receipt of the ABI signals the beginning of the Notification phase for a particular flight. Coordination will take place when the aircraft is within a parameter distance/time of the boundary.
	EST	Receipt of the ABI signals the beginning of the notification phase for a particular flight. Coordination will take place when the aircraft is within a parameter distance/time of the boundary.
Coordination Sequences		
CPL	ACP	The aircraft's current clearance is acceptable.
	CDN	The aircraft's current clearance is not acceptable to the receiving airspace and must be modified.
EST	ACP	The boundary crossing conditions are in accordance with the agreement that exists between the two ATSUs.
PAC	ACP	The boundary crossing conditions are in accordance with the agreement that exists between the two ATSUs.
CDN	ACP	The negotiated clearance is acceptable to both ATSUs.
	CDN	The proposed clearance modification is not acceptable to one of the airspaces and a new proposal is submitted.
	REJ	The last clearance agreed to by both airspaces must be honoured.
TRU	CDN	The proposed clearance modification is not acceptable to one of the airspaces and a new proposal is submitted.
	TOC	The aircraft is at or near the boundary.
	TRU	Notification of an amendment to the previously accepted clearance.
	MAC	Indicates that the flight is no longer expected to enter the downstream ATSU's ACI
ACP	CDN	A request for modification or a previously accepted clearance is submitted.
	TRU	Notification of an amendment to the previously accepted clearance.
	TOC	The aircraft is at or near the boundary.

	MAC	The coordinated flight may be cancelled, indicating Indicates that the flight is no longer expected to enter the downstream ATSU's ACI.
Received Message	**Next Valid Message**	**Comments**
REJ	CDN	
	TOC	
	MAC	
Transfer of Control Sequence		
TOC	AOC	The aircraft is at or near the boundary.
AOC	CDN	A request for modification of a previously accepted clearance is submitted.

7.52 Table 7-6 lists the AIDC messages which are valid for each state. The ATSU which can transmit the message is also identified.

Table 7-6. Valid Messages by ATSU

Flight State	Message	Sent by
Notifying	ABI	Controlling ATSU
Notifying	MAC	Controlling ATSU
Notifying	CPL	Controlling ATSU
Notifying	EST	Controlling ATSU
Notifying	PAC	Controlling ATSU
Negotiating	CDN	Either ATSU
Negotiating	ACP	Either ATSU
Coordinating	ACP	Receiving ATSU
Coordinated	CDN	Either ATSU
Coordinated	TRU	Controlling ATSU
Coordinated	TOC	Controlling ATSU
Coordinated	MAC	Controlling ATSU
Re-Negotiating	CDN	Either ATSU
Re-Negotiating	ACP	Either ATSU
Re-Negotiating	REJ	Either ATSU
Transferring	AOC	Receiving ATSU

Flight State	Message	Sent by
Transferred	CDN	Either ATSU
Backward-Re-Negotiating Backward-Coordinating	CDN	Either ATSU
Backward-Re-Negotiating Backward-Coordinating	ACP	Either ATSU
Backward-Re-Negotiating Backward-Coordinating	REJ	Either ATSU

7.6 Other messages

7.61 The previous sections have discussed the use of Notification, Coordination, Transfer of Control, and Application Management messages. There are two remaining message subgroups in the AIDC messages: (1) General Information messages; and (2) Surveillance Data Transfer messages. All messages within these two subgroups require an application response; no operational response is defined.

7.62 General information messages.

7.62.1 EMG and MIS Messages.

7.62.1.1 These messages support the exchange of text information between ATSUs. A communicator (usually a person, but a computer or application process is also permitted) in one ATSU can send a free text message to a functional address at another ATSU. Typical functional addresses could be an area supervisor or an ATC sector. If further EMG or MIS messages are transmitted in response to a previously received EMG or MIS, the later messages shall include the original message identifier within field 3 of the AFTN header. The EMG shall have an AFTN emergency priority (SS).

7.63 Surveillance data transfer messages.

7.63.1 The ADS message is used to transfer data contained within an ADS-C report including optional ADS-C groups to an adjacent ATSU.

7.63.2 The ADS message contains a text field – the ADS-C data field – which contains information from the ADS-C report in its original hexadecimal format. The ADS-C data field consists of the text that immediately follows the "ADS" IMI (but excluding the 4 character CRC) within the application data portion of the ADS-C report.

7.63.3 The following example shows an encoded ACARS ADS-C report – as it would be received by an ATSU – as well as an example of what information from this report would be transferred into the corresponding ADS-C data field. The ATSU receiving the AIDC ADS message simply decodes the ADS-C data field and extracts the data that is required by the ATSU.

ACARS ADS-C report	QU BNECAYA .QXSXMXS 011505 PAR FI NZ0090/AN ZK-OKC DT QXT POR1 011505 F59A - ADS.ZK- OKC030007FF946B6F6DC8FC044B9D0DFC013B80DA88F COA64F9E4438B4AC8FC000E34D0EDC00010140F3E8660F3
ADS-C data field	ADS/.ZK- OKC030007FF946B6F6DC8FC044B9D0DFC013B80DA88FC0 A64F9E4438B4AC8FC000E34D0EDC00010140F3E86

Note. Because it is part of the 7 character registration field the leading "." must be retained in front of the registration (".ZK-OKC"). The 4 character CRC ("60F3") at the end of the ACARS message is not included in the ADS-C data field.

7.63.4 The types of ADS-C reports (i.e. periodic or event) transmitted by the AIDC ADS message shall be in accordance with bilateral agreements. When implementing the AIDC ADS message, ATSUs should consider the effect of relaying numerous ADS-C periodic reports via ground-ground links (e.g. AFTN) when a high periodic reporting rate is in effect.

7.63.4.1 The AIDC ADS message is used to transfer ADS-C information only. Other messaging protocols exist for the transfer of ADS-B information.

7.63.4.2 While the AIDC ADS message may be used to transfer ADS-C information, this data may also be transferred using the ACARS ground-ground network by re-addressing the received ADS-C message to the other ATSU. States should agree on the method to be used on a bilateral basis.

Example: Brisbane ATSU (BNECAYA) receives an ADS-C downlink via the ACARS network from its Data link Service Provider SITA (QXSXMXS)

QU BNECAYA
.QXSXMXS 011505
PAR
FI NZ0090/AN ZK-OKC
DT QXT POR1 011505 F59A
- ADS.ZK-
OKC0300FF946B6F6DC8FC044B9D0DFC013B80DA88FC0A64F9E4438B4AC8FC00
0E34D0EDC00010140F3EE8660F3

Brisbane re-addresses the downlink and forwards to Auckland via the ACARS ground-ground network:

QU AKLCBYA
.BNECAYA 011505
PAR
FI NZ0090/AN ZK-OKC
DT QXT POR1 011505 F59A
- ADS.ZK-
OKC0300FF946B6F6DC8FC044B9D0DFC013B80DA88FC0A64F9E4438B4AC8FC00
0E34D0EDC00010140F3EE8660F3

7.7 Examples

7.71 Several examples illustrating the use of the AIDC Message set are presented. No Application Management messages (principally the LAM, but also the LRM and ASM) are shown for clarity, though these messages are almost always sent as an application acknowledgement response to the receipt of a Notification, Coordination or Transfer of Control message.

7.72 Standard coordination.

7.72.1 Brisbane transmits a notification message (ABI) to Auckland forty five minutes prior to the time that QFA108 is expected to cross the FIR boundary (1209). The destination of the flight is Christchurch.

7.72.2 The abbreviated coordination message (EST) is transmitted by Brisbane thirty minutes prior to the boundary estimate (which is now 1213). Auckland accepts the proposed coordination conditions by responding with an ACP. Auckland accepts ATC responsibility by responding with an AOC.

7.72.3 Brisbane transfers ATC responsibility approaching the FIR boundary by transmitting a TOC.

7.72.4 The timing of the transmission of these messages is defined in bilateral agreements between the two ATS units.

Example Standard coordination

Brisbane	***Auckland***
(ABI-QFA108-YBBN-33S163E/1209F350 -NZCH-8/IS-9/B744/H-10/SDHIWRJ -15/M084F350 35S164E 36S165E…)	
(EST-QFA108-YBBN-33S163E/1213F350-NZCH)	
	(ACP-QFA108-YBBN-NZCH)
(TOC-QFA108-YBBN-NZCH)	
	(AOC-QFA108-YBBN-NZCH)

7.72.5 Santa Maria Oceanic Area Control (OAC) informs New York OAC several hours in advance that flight TAP001 is expected to cross the Santa Maria FIR boundary into the New York FIR at approximately 1209 PM (ABI). The flight will continue on to San Juan, Puerto Rico.

7.72.6 Coordination between Santa Maria OAC and New York OAC occurs approximately twenty minutes before the expected boundary crossing time, which has been revised to 1213 PM (CPL). New York OAC accepts the coordination conditions without modification (ACP).

7.72.7 Santa Maria OAC transfers ATC responsibility near the boundary (TOC). New York OAC accepts ATC responsibility by responding with an AOC.

Example Standard coordination

Santa Maria OAC	***New York OAC***

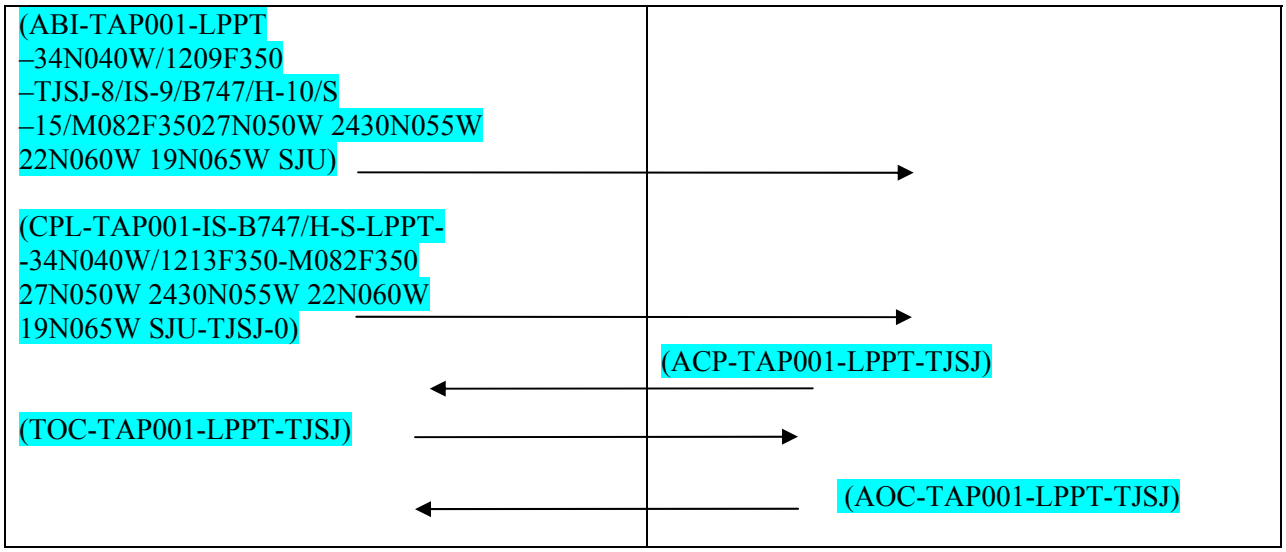

7.73 Negotiation of coordination conditions.

7.73.1 Brisbane transmits a notification message (ABI) to Auckland forty five minutes prior to the time that TAP001 is expected to cross the FIR boundary (1209). The destination of the flight is Christchurch.

7.73.2 The coordination message (CPL) is transmitted by Brisbane thirty minutes prior to the boundary estimate (which is now 1213).

7.73.3 Auckland responds with a negotiation message (CDN) requesting a change in the boundary crossing altitude to F390. Brisbane responds with an ACP indicating that the revised altitude is acceptable.

7.73.4 Brisbane transfers ATC responsibility approaching the FIR boundary by transmitting a TOC. Auckland accepts ATC responsibility by responding with an AOC.

7.73.5 The timing of the transmission of these messages is defined in bilateral agreements between the two ATS units.

Example Negotiation of Coordination Conditions

Brisbane	***Auckland***
(ABI-QFA56-YBBN-33S163E/1209F350-NZCH-8/IS-9/B744/H-10/SDHIWRJ-15/M084F350 35S164E 36S165E ...)	
(CPL-QFA56-IS-B744/H-SDHIWRJ-YBBN -33S163E/1213F350-M084F350 35S164E 36S165E NZCH -0.)	
	(CDN-QFA56-YBBN-NZCH -14/33S163E/1213F390)
(ACP-QFA56-YBBN-NZCH)	

(TOC-QFA56-YBBN-NZCH)	
	(AOC-QFA56-YBBN-NZCH)

7.73.6 Santa Maria OAC informs New York OAC several hours in advance that flight TAP001 is expected to cross the Santa Maria FIR boundary into the New York FIR at approximately 1209 PM (ABI). The flight will continue on to San Juan, Puerto Rico.

7.73.7 Coordination between Santa Maria OAC and New York OAC occurs approximately twenty minutes before the expected boundary crossing time, which has been revised to 1213 PM (CPL). New York OAC requests a change in the boundary crossing altitude to F390 (CDN), which Santa Maria OAC signals as acceptable (ACP).

7.73.8 Santa Maria OAC transfers ATC responsibility near the boundary (TOC). New York OAC accepts ATC responsibility by responding with an AOC.

Example Negotiation of Coordination Conditions

Santa Maria OAC	***New York OAC***
(ABI-TAP001-LPPT –34N040W/1209F350 –TJSJ-8/IS-9/B747/H-10/S –15/M082F35027N050W 2430N055W 22N060W 19N065W SJU) →	
(CPL-TAP001-IS-B747/H-S-LPPT- -34N040W/1213F350-M082F350 27N050W 2430N055W 22N060W 19N065W SJU-TJSJ-0) →	
←	(CDN-TAP001-LPPT-TJSJ –14 / 34N040W/1213F390)
(ACP-TAP001-LPPT-TJSJ) →	
(TOC-TAP001-LPPT-TJSJ) →	
←	(AOC-TAP001-LPPT-TJSJ)

7.74 Re-negotiation rejected.

7.74.1 Brisbane transmits a notification message (ABI) to Auckland forty five minutes prior to the time that QFA108 is expected to cross the FIR boundary (1209). The destination of the flight is Christchurch.

7.74.2 The coordination message (CPL) is transmitted by Brisbane thirty minutes prior to the boundary estimate (which is now 1213). Auckland accepts the proposed coordination conditions without modification by responding with and ACP.

7.74.3 Some time after the initial coordination process has been completed, but before the start of the Transfer of Control process, Auckland requests an amendment to the boundary crossing altitude

by transmitting a negotiation message (CDN). Brisbane cannot accept the proposed change due to conflicting traffic in its FIR and therefore rejects the request (REJ).

7.74.4 Brisbane transfers ATC responsibility approaching the FIR boundary by transmitting a TOC. Auckland accepts ATC responsibility by responding with an AOC.

7.74.5 The timing of the transmission of these messages is defined in bilateral agreements between the two ATS units.

Example. Rejection of Renegotiated Coordination

Brisbane	***Auckland***
(ABI-QFA108-YBBN-33S163E/1209F350 -NZCH-8/IS-9/B744/H-10/SDHIWRJ -15/M084F350 35S164E 36S165E….)	
(CPL-QFA108-IS-B744/H-SDHIWRJ-YBBN -33S163E/1213F350-M084F350 35S164E 36S165E NZCH -0.)	
	(ACP-QFA108-YBBN-NZCH)
	(CDN-QFA108-YBBN-NZCH -14/33S163E/1213F390)
(REJ-QFA108-YBBN-NZCH)	
(TOC-QFA108-YBBN-NZCH)	
	(AOC-QFA108-YBBN-NZCH)

7.74.6 Santa Maria OAC informs New York OAC several hours in advance that flight TAP001 is expected to cross the Santa Maria FIR boundary into the New York FIR at approximately 1209 PM (ABI). The flight will continue on to San Juan, Puerto Rico.

7.74.7 Coordination between Santa Maria OAC and New York OAC occurs approximately twenty minutes before the expected boundary crossing time, which has been revised to 1213 PM (CPL). New York OAC accepts the coordination conditions without modification (ACP).

7.74.8 Some time after the initial Coordination process has been completed, but before the start of the Transfer of Control process, New York OAC attempts to modify the boundary crossing altitude (CDN), due to unexpected traffic in the area. Santa Maria OAC can not accept the proposed change due to conflicting traffic in its FIR, and therefore rejects the proposal (REJ).

7.74.9 Santa Maria OAC transfers ATC responsibility near the boundary (TOC). New York OAC accepts ATC responsibility by responding with an AOC.

Example Rejection of Renegotiated Coordination

Santa Maria OAC	***New York OAC***
(ABI-TAP001-LPPT –34N040W/1209F350 –TJSJ-8/IS-9/B747/H-10/S –15/M082F35027N050W 2430N055W	

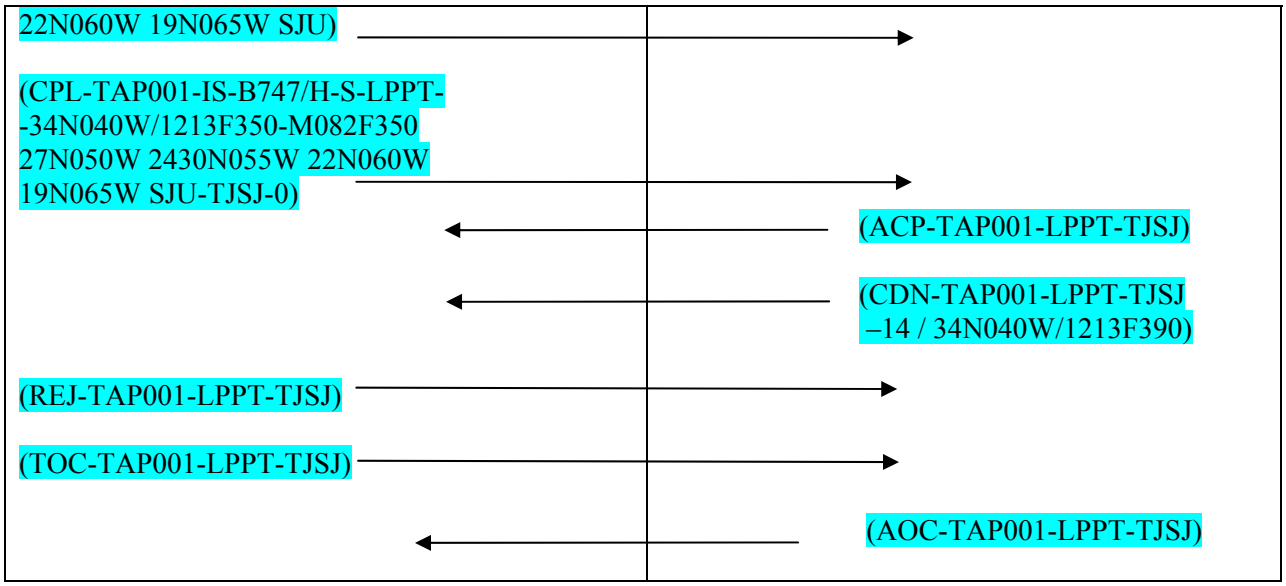

7.75 Abbreviated coordination.

7.75.1 Several minutes before AAA842's departure time (e.g. at taxi time), coordination between Bali and Brisbane is effected by Bali transmitting a coordinationa message (PAC). This message alerts Brisbane that the flight is pending and indicates a boundary estimate of 1213 at f290. Brisbane accepts the coordination conditions without modification by responding with an ACP.

7.75.2 On departure, the aircraft's actual estimate differs from that coordinated by more than the value specified in bilateral agreements. The new estimate is coordinated to Brisbane by Bali transmitting a CDN message to Brisbane. Brisbane accepts this revised estimate by responding with an ACP message.

7.75.3 Bali transfers ATC responsibility approaching the FIR boundary by transmitting a TOC. Brisbane accepts ATC responsibility by responding with an AOC.

7.75.4 The timing of the transmission of these messages is defined in bilateral agreements between the two ATS units.

Example. Abbreviated coordination

Bali	***Brisbane***
(PAC-AAA842/A4534-IS-B737/M-WRRR- -OGAMI/1213F290-YPPH…)	
	(ACP-AAA842/A4534-WRRR-YPPH)
(CDN-AAA842/4534-WRRR-YPPH- 14/OGAMI/1219F290)	
	(ACP-AAA842/A4534-WRRR-YPPH)
(TOC-AAA842/A4534-WRRR-YPPH)	
	(AOC-AAA842/A4534-WRRR-YPPH)

7.76 Multiple modifications + AIDC cancellation.

7.76.1 Brisbane transmits a notification message (ABI) to Auckland forty five minutes prior to the time that QFA11 is expected to cross the FIR boundary (1105). The destination of the flight is Los Angeles.

7.76.2 Prior to transmitting the coordination message, a modification to the cleared flight level is made resulting in the transmission of another notification message. This ABI contains the latest boundary information of the aircraft showing that the current boundary estimate is now 1107.

7.76.3 The abbreviated coordination message (EST) is transmitted by Brisbane thirty minutes prior to the boundary estimate (which is now 1108). Auckland accepts the proposed coordination conditions by responding with an ACP.

7.76.4 Due to weather QFA11 requests and is issued an amended route clearance that will now no longer affect Auckland. To advise of the cancellation of any previously transmitted AIDC messages, a MAC message is transmitted to Auckland.

7.76.5 The timing of the transmission of these messages is defined in bilateral agreements between the two ATS units.

Example. Multiple notifications + AIDC cancellation

Brisbane	***Auckland***
(ABI-QFA11-YSSY-31S163E/1105F290 -KLAX-8/IS-9/B744/H-10/SDHIWRJ-15/M085F29033S158E 30S168E….)	
(ABI-QFA11-YSSY-31S163E/1107F310 KLAX-8/IS-9/B744/H-10/SDHIWRJ 15-M084F29033S158E 30S168...)	
(EST-QFA11-YSSY-31S163E/1108F310-KLC	
	(ACP-QFA11-YSSY-KLAX
(MAC-QFA11-YSSY-KLAX)	

7.77 Multiple negotiations.

7.77.1 Brisbane transmits a notification message (ABI) to Auckland forty five minutes prior to the time that QFA108 is expected to cross the FIR boundary (1209). The destination of the flight is Christchurch.

7.77.2 The abbreviated coordination message (EST) is transmitted by Brisbane thirty minutes prior to the boundary estimate (which is now 1213). Auckland accepts the proposed coordination conditions by responding with an ACP.

7.77.3 QFA108 requests F370. The bilateral Letter of Agreement between Brisbane and Auckland requires that prior coordination is completed before issuing a change of level after initial coordination. Brisbane transmits a negotiation message (CDN) proposing the change of level to F370. This level is not available in Auckland's airspace, but an alternative level is available. Auckland therefore responds with a negotiation message proposing F360. Brisbane responds with an ACP indicating that this level is acceptable to Brisbane (and QFA108).

7.77.4 Brisbane transfers ATC responsibility approaching the FIR boundary by transmitting a TOC. Auckland accepts ATC responsibility by responding with an AOC.

7.77.5 The timing of the transmission of these messages is defined in bilateral agreements between the two units.

7.77.5.1 Complex re-negotiations may be more easily solved by voice communication.

Example. Multiple negotiations

Brisbane	***Auckland***
(ABI-QFA108-YBBN-33S163E/1209F350 -NZCH-8/IS-9/B744/H-10/SDHIWRJ -15/M084F350 35S164E 36S165E….)	
(EST-QFA108-YBBN-33S163E/1213F350-NZCH)	
	(ACP-QFA108-YBBN-NZCH)
(CDN-QFA108-YBBN-NZCH -14/33S163E/1213F370)	
	(CDN-QFA108-YBBN-NZCH -14/33S163E/1213F360)
(ACP-QFA108-YBBN-NZCH)	
(TOC-QFA108-YBBN-NZCH)	
	(AOC-QFA108-YBBN-NZCH)

7.78 Standard coordination with proposed amended destination.

7.78.1 Brisbane transmits a notification message (ABI) to Auckland forty five minutes prior to the time that ANZ136 is expected to cross the FIR boundary (1400). The destination of the flight is Christchurch.

7.78.2 The abbreviated coordination message (EST) is transmitted by Brisbane thirty minutes prior to the boundary estimate (which is now 1401). Auckland accepts the proposed coordination conditions by responding with an ACP.

7.78.3 ANZ136 requests a deviation to Auckland (NZAA). Brisbane transmits a Coordination message (CDN) to Auckland proposing changes to the previously agreed coordination conditions (route and boundary estimate) as well as the new destination. Auckland accepts the proposed revision(s) by the transmission of an ACP. All subsequent AIDC messages for ANZ136 contain “NZAA” as the destination aerodrome.

7.78.4 Brisbane transfers ATC responsibility approaching the FIR boundary by transmitting a TOC. Auckland accepts ATC responsibility by responding with an AOC.

7.78.5 The timing of the transmission of these messages is defined in bilateral agreements between the two ATS units.

Example Coordination of amended destination

Brisbane	***Auckland***
(ABI- *ABI-ANZ136-YBBN-RUNOD/1400F350 -NZCH-8/IS-9/A320/M-10/SDHIWR -15/M078F350 SCOTT Y32 LOKET L503 LALAP DCT ...*)	
(EST-ANZ136-YBBN-RUNOD33S163E/1401F350-NZCH)	
	(ACP-ANZ136-YBBN-NZCH)
(CDN-ANZ136-YBBN-NZCH -14/ESKEL/1357F350-15/ SCOTT Y32 LOKET WOOLY ESKEL L521 AA-DEST/NZAA)	
	(ACP-ANZ136-YBBN-NZAA)
(TOC-ANZ136-YBBN-NZAA)	
	(AOC-ANZ136-YBBN-NZAA)

7.79 Standard coordination including FAN/FCN exchange.

7.79.1 Brisbane transmits a notification message (ABI) to Auckland forty five minutes prior to the time that UAL815 is expected to cross the FIR boundary (0330).

7.79.2 The abbreviated coordination message (EST) is transmitted by Brisbane thirty minutes prior to the boundary estimate. Auckland accepts the proposed coordination conditions by responding with an ACP.

7.79.3 Brisbane transmits a FAN message to Auckland providing the logon information that Auckland requires to establish a CPDLC connection as well as ADS contracts.

7.79.4 When a CPDLC connection is established, Auckland transmits a FCN to Brisbane containing the appropriate frequency for the aircraft to monitor.

7.79.5 The current flight plan message (CPL) is transmitted by Brisbane thirty minutes prior to the boundary estimate. Auckland accepts the proposed coordination conditions by responding with an ACP.

7.79.6 Brisbane transfers ATC responsibility approaching the FIR boundary by transmitting a TOC. Auckland accepts ATC responsibility by responding with an AOC.

7.79.7 Brisbane terminates the CPDLC connection with UAL815 and transmits an FCN to Auckland to advise them that the CPDLC connection has been terminated.

7.79.8 The timing of the transmission of these messages is defined in bilateral agreements between the two ATS units.

Example. Standard coordination including FAN and FCN exchanges

Brisbane	***Auckland***
(ABI-UAL815/-YSSY-3050S16300E3200S16300E/0330F290	

-KLAX-8/IS-9/B744/H-10/SDHIRZYWJP/CD-15/N0499F310 NOBAR A579 JORDY DCT 3200S16000E 3050S16300E 2800S16500E…)	
(EST-UAL815-YSSY-3050S16300E33S163E/0330F290-KLAX)	
	(ACP-UAL815-YSSY-KLAX)
(FAN-UAL815-YSSY-KLAX-SMI/FML FMH/UAL815 REG/N123UA FPO/3330S15910E FCO/ATC01 FCO/ADS01)	
	(FCN-UAL815-YSSY-KLAX-CPD/2-FREQ/13261)
(TOC-UAL815-YSSY-KLAXz)	
	(AOC-UAL815-YSSY-KLAX)
(FCN-UAL815-YSSY-KLAX-CPD/0)	

7.80 Standard coordination with TRU update.

7.80.1 An abbreviated coordination message (EST) is transmitted by Melbourne as soon as UAE412 departs Sydney. Brisbane accepts the proposed coordination conditions by responding with an ACP.

7.80.2 The Sydney Departure controller assigns the aircraft a heading of 100 degrees magnetic and issues instructions to maintain FL200. A TRU is transmitted to update the Brisbane controller's flight details.

7.80.3 Melbourne transfers ATC responsibility approaching the FIR boundary by transmitting a TOC. Brisbane accepts ATC responsibility by responding with an AOC.

Example Coordination of amended clearances via TRU

Brisbane	***Auckland***
(EST-UAE412-YSSY-EVONN/0130F280-NZAA)	
	(ACP-UAE412-YSSY-NZAA)
(TRU-UAE412-YSSY-NZAA-HDG/100 CFL/F200)	
(TOC-UAE412-YSSY-NZAA)	(AOC-UAE412-YSSY-NZAA)

7.8 Notes

7.81 The IGM concerns communications between two ATSUs within the NAT/APAC Regions. Inter-centre communications within one country, and communications with ATSUs outside the NAT/APAC regions, though important to an ATC system's design and implementation are not part of the scope of this material.

7.82 Initialization and termination conditions.

7.82.1 Only material pertaining to flights within NAT/APAC oceanic FIRs is included. Most flights depart from aerodromes outside the region, then transition into the NAT/APAC. Similarly, most flights transition from a NAT/APAC FIR into a non-NAT/APAC FIR. These transitions are not discussed. The required Notification, Coordination and Transfer of Control processes are dependent on the particular transition. For example, the transition from New York oceanic FIR to New York domestic is different than the transition from Shanwick oceanic to UK domestic. These transitions must be accounted for when designing and implementing an ATC system; however, they are outside the scope of the NAT Common Coordination ICD.

7.82.2 Air/ground events.

7.82.2.1 Certain air/ground events may be associated with the particular flight states. These include ADS contract establishment and Data Link Transfer. Assume that an aircraft is ADS equipped, and that the current controlling centre is receiving ADS reports. The flight then undergoes a coordination process, leaving it in Coordinated state with one or more downstream ATS Units. These ATS Units may now establish separate ADS contracts with the aircraft to monitor its position just before and after entry into a new FIR. The Coordinated state has been linked with a specific A/G event – establish an ADS contract.

7.82.2.2 Similarly, Transfer of a Data Link connection may be linked with the Transferred state. Only one ATS Unit has control authority over an aircraft at any given time. This unit would transfer its Data Link connection during the Transfer of Control process.

Chapter 8. Common Boundary Agreements

8.1 Introduction

8.11 Due to the individual nature of operations in the vicinity of OCA boundaries, some divergence from the common ICD is required. These differences and other procedures are defined in the following sections. The long term aim should be to adopt the contents of Chapter 2, *Purpose, Policy & Units of Measurement*, and Chapter 3, *Communications & Support Mechanisms*, with only variable system parameters.

8.2 Interfaces

8.21 Reykjavik/Shanwick Interface.

8.21.1 General.

8.21.1.1 On-line message transfer will be effected by discrete links, but may eventually be superseded by the AFTN subject to the latter satisfying the required standards as to integrity and response.

8.21.1.2 All messages listed in Chapter 3, para 3.2, *Message Headers, Timers and ATSU Indicators*, except RPT and TAM, will contain Data Transfer Numbers consisting of a two letter directional indicator followed by a three digit serial number. The direction indicators will be 'RO' for Reykjavik to Shanwick and 'OR' for Shanwick to Reykjavik.

8.21.1.3 A TAM will be sent by each unit for every message received with ATS Field 3 syntactically correct. If a TAM is not received within 3 minutes of a message being transmitted, the message will be repeated. If, after a further 1 ½ minutes a TAM still has not been received, the message will be repeated for a second time. If, 1 ½ minutes later a TAM still has not been received, notification will be output locally for manual intervention.

8.21.1.4 The systems must be capable of altering the time intervals mentioned if required. The adaptable parameters from the time of the initial transmission being:

1st repeat	-	1 to 4 minutes
2nd repeat	-	1 ½ to 6 minutes
Local notification	-	2 to 8 minutes

8.21.1.5 The automatic acknowledgement and repeat of messages should be able to be suppressed.

8.21.2 Notification of Organized Track Structure and elapsed times.

8.21.2.1 The NAT messages will be transmitted by Shanwick for the day track structure, with tracks designated 'A' to 'M' inclusive (except 'I').

8.21.2.2 Tables of elapsed times (ETAFs) for tracks infringing the Reykjavik OCA will be transmitted on the discrete line as a MIS message. See Chapter 4, *ATS Coordination Messages*, para 4.6.4, for the layout of this message. For each requested track, the output will contain the estimate elapsed times for each segment of the track in both directions at speeds of Mach 0.80, 0.82 and 0.84 for each flight level declared available for the track.

8.21.3 Clearance messages.

8.21.3.1 Automatic Data Transfer (ADT) will be effected for all flights in both directions which cross, fly along or touch 61N between 10W and 30W inclusive. Initially ADT may be restricted to

eastbound flights from Reykjavik to Shanwick, and westbound flights from Shanwick to Reykjavik with full implementation at a later date. Data transfer for these flights will be in the form of CLR messages.

8.21.3.2 Transmission of the CLR message in either direction will take place 60 minutes (adaptable) before 61N whether the flight has a route point coincident with 61N or not.

8.21.3.3 The first route point stated in a CLR will be the route point prior to 61N and may be a lat/long or a fix identifier in UK domestic airspace or Icelandic airspace. For flights operating wholly on an organised track, the remainder of the route will be specified by the appropriate track designator (e.g. NATA). For random flights, details of the cleared route to landfall will be transmitted, but OAC FDPS currently does not hold route details beyond 70N and/or 80W.

8.21.3.4 Once CLR has been transmitted, no further CLRs will be issued for the same flight while the original flight plan remains valid.

8.21.3.5 The flight level stated in the CLR will be the final level known to the originating system at the time of ADT.

8.21.4 Repeat messages.

8.21.4.1 RPT messages will be sent manually by the receiving centre when missing serial numbers are detected, or when a message received containing a serial number is found to contain text errors. OAC FDPS is capable of actioning an RPT request for messages up to 6 hours preceeding the time of input of the RPT message.

8.21.5 Cancellation messages.

8.21.5.1 A CNL message will be generated only when a flight plan is cancelled subsequent to a CLR being sent.

8.21.6 Miscellaneous messages.

8.21.6.1 The MIS message will be used to transmit plain language statements or queries between the two centres, and also the transmission of organised track elapsed times.

8.21.7 System or line failures.

8.21.7.1 Basic communication facilities between the two centres will be available in the even of system failures. The actions to be taken will be defined in the current version of the Letter of Agreement between Shanwick and Reykjavik ACC.

8.22 Gander/Shanwick interface.

8.22.1 General.

8.22.1.1 On-line message transfer is currently effected by discrete links which may eventually be superseded by the AFTN/CIDIN subject to the latter satisfying the required standards as to integrity and response.

8.22.1.2 All messages listed in Chapter 4, *ATS Coordination Messages* – except RPT and TAM contain Data Transfer Numbers consisting of a two letter directional indicator followed by a three digit serial number. The direction indicators are ‘GO’ for Gander to Shanwick and ‘OG’ for Shanwick to Gander.

8.22.1.3 A TAM is sent by each unit for every message received with ATS Field 3 syntactically correct. If a TAM is not received within three minutes of a message being transmitted, the message will be repeated. If, after a further 1 ½ minutes a TAM still has not been received, the message will be

repeated for a second time. If, 1 ½ minutes later a TAM still has not been received, notification will be output locally for manual intervention.

8.22.1.4 The system must be capable of altering the time intervals mentioned if required – the variable system parameters (from the time of the initial transmission) being:

First repeat	-	1 to 4 minutes
Second repeat	-	1 ½ to 6 minutes
Local notification	-	2 to 8 minutes

8.22.1.5 The automatic repetition of messages may be terminated by agreement.

8.22.2 Notification of Organized Track Structure and elapsed times.

8.22.2.1 The NAT message is transmitted by Shanwick for the day structure and by Gander for the night structure.

8.22.2.2 The tracks stored by either centre shall be activated, altered or deleted – depending on operational requirements – by appropriate local action.

8.22.2.3 Day tracks are designated 'A' to 'M' inclusive (except 'I') and Night tracks 'N' to 'Z' (except 'O').

8.22.2.4 When requested, tables of elapsed times (ETAFs) will be transmitted on the discrete lines as a MIS message by the centre responsible for the establishment of the track structure.

8.22.2.5 ETAFs can be output for Organised and Contingency Tracks and will consist of the established elapsed times for each segment of the track for flights in both directions at speeds of Mach 0.80, 0.82 and 0.84 for each Flight Level declared available on the track.

8.22.2.6 Contingency tracks will be designated by two numerics commencing at '01'.

8.22.3 Clearance messages.

8.22.3.1 Automatic Data Transfer (ADT) will be effected for flights in both directions which cross 30W between 45 and 61N inclusive at FL060 (adaptable) or above. Data transfer for these flights will be in the form of CLR messages.

8.22.3.2 Transmission of the CLR message in either direction will take place 60 minutes (adaptable) before 30W.

8.22.3.3 Each system will action the content of any CLR message received, either by processing in accordance with local procedures, or by intimation of text failure to a local position.

8.22.3.4 For flights operating wholly on Organised Tracks, the first position stated in the CLR will be 20W or 40W as dictated by the direction of flight with the route being specified by the appropriate track designator (e.g. NATB). In the case of Random flights, full route details from or after 20W or 40W will be transmitted. Both systems will be capable of transmitting the entire Oceanic route if this becomes an operational requirement.

8.22.3.5 Once a CLR has been transmitted, no further CLRs will be issued for the same flight while the original flight plan remains valid.

8.22.3.6 In order to work towards compatibility of the application of "deemed" separation standards, each unit should be aware of the special separations incorporated in each others conflict algorithm.

8.22.3.7 The flight level stated in the CLR will be the final cleared level known to the originating system at the time of ADT.

8.22.4 Repeat message.

8.22.4.1 RPT messages will be sent manually by the receiving centre when missing serial numbers are detected, or when a message received containing a serial number is found to contain text errors. The RPT message will be input manually and actioned by the computer at the centre to which it was sent.

8.22.4.2 Each computer is capable of actioning a RPT request for any or all of the 64 messages immediately preceding the latest message issued. The message repeated will be an exact copy of the message originally issued under the Data Transfer Number quoted in the RPT.

8.22.5 Cancellation messages.

8.22.5.1 A CNL message will be generated when re-routing necessitates the cancellation of a previously sent CLR message. This will occur when the flight's route will now no longer traverse airspace as defined in paragraph ~~3.3.1~~.

8.22.6 Miscellaneous messages.

8.22.6.1 The "MIS" message will be used to transmit plain language statements or queries between the two centres. However, the MIS message will also be used for the transmission of NAT elapsed times incorporating the information in paragraph ~~3.2.5~~ .

8.23 Gander/Reykjavik interface.

8.23.1 Gander is responsible for the boundary. The interface is currently manual.

8.24 Gander/New York interface.

8.24.1 The interface is currently manual, however, development and testing is ongoing of an automated AIDC interface.

8.25 New York/Santa Maria interface.

8.25.1 The interface is affected through AFTN and comprises only Initial Coordination Messages (CPL and ACP) and the appropriate Application Management Messages (LAM, LRM and ASM). Notification and Negotiation Phases will be implemented at a later date.

8.25.2 The concept of operation, message content and communication mechanisms of the above messages was adopted in accordance with Chapters 2 and 4 of the PAN ICD, except:

a) No restrictions are in use.

b) CPL sent from New York contains full route until destination.

8.25.3 The ACP message is triggered manually by the controller and closes the dialogue automatically. Verbal coordination is still required for counter-proposals (Negotiation) and upon the following:

a) Crossing conditions and/or restrictions at the boundary including blocking levels.

b) Any profile change from a previously coordinated and accepted profile.

c) At the LAM time out warning after sending a CPL or an ACP.

d) When receiving an LRM in response to a CPL or an ACP.

8.26 Gander/Santa Maria interface.

8.26.1 The interface is currently manual.

8.27 Shanwick/Santa Maria interface.

8.27.1 The interface is currently manual.

8.28 Bodø/Reykjavik interface.

8.28.1 The interface is currently manual.

Chapter 9. Relationship to ICAO AIDC Messages

9.1 Introduction

9.11 The AIDC message set can be tailored to satisfy regional requirements. The ADS Panel OPLINKP documentation defining the AIDC data link application provides three means for achieving regional adaptation of the AIDC messages:

9.11.1 Regions select an AIDC subset that will support their regional operational procedures.

9.11.2 The selected messages are tailored by mandating the usage of optional components into one of three classes:

a) The optional component that must always be used;

b) The optional component that must never be used; and,

c) The optional component is truly optional.

9.11.3 For interim, pre-ATN implementations, encoding rules may be specified by a region. The most frequently used encoding rules today employ ICAO ATS fields and messages. The default encoding rules are the ISO Packed Encoding rules.

9.11.4 Using the regional tailoring procedure stated above, the NAT/APAC Core messages are related to a subset of the AIDC messages and are shown in Table 9-1.

9.11.5 The encoding rules employed within the NAT/APAC will remain for the foreseeable future as the ICAO ATS field and message-based, character-oriented rules currently defined in the NAT/APAC AIDC Interface Control Document (ICD) (and ICAO PANS-ATM Doc 4444).

Table 9-1. PAN ICD AIDC/ICAO AIDC Relationship

ICAO AIDC message	PAN ICD AIDC message	ICAO AIDC message	PAN ICD AIDC message	ICAO AIDC message	PAN ICD AIDC message	
		Mandatory data fields		Optional data fields		O
Notify	ABI	Aircraft identification Departure Aerodrome Destination Aerodrome Boundary estimate data	Aircraft identification SSR Mode and Code (where applicable) Departure Aerodrome Destination Aerodrome Boundary estimate data Number of aircraft Aircraft type Wake turbulence category Route	Flight rules Type of flight Number of aircraft (if more than one in the flight) Aircraft type Wake turbulence category CNS equipment Route Amended destination Code (SSR) Other information	Flight rules Equipment Route Other information Amended destination	Alw Alw Alw Opt
Coordinate Initial	CPL	Aircraft identification Departure Aerodrome Destination Aerodrome Boundary estimate data	Aircraft identification SSR Mode and Code (where applicable) Departure Aerodrome Destination Aerodrome Boundary estimate data Flight Rules Number of aircraft Aircraft type Wake turbulence category Equipment Route Other information	Flight rules Type of flight Number of aircraft (if more than one in the flight) Aircraft type Wake turbulence category CNS equipment Route Amended destination Code (SSR) Other information	Flight rules Equipment Route Other information	Alw Alw Alw Opt

ICAO AIDC message	PAN ICD AIDC message	ICAO AIDC message	PAN ICD AIDC message	ICAO AIDC message	PAN ICD AIDC message	
		Mandatory data fields		Optional data fields		O
Coordinate Initial Estimate	EST	Aircraft identification Departure Aerodrome Destination Aerodrome Boundary estimate data	Aircraft identification SSR Mode and Code (where applicable) Departure Aerodrome Destination Aerodrome Boundary estimate data	Flight rules Type of flight Number of aircraft (if more than one in the flight) Aircraft type Wake turbulence category CNS equipment Route Amended destination Code (SSR) Other information		
Coordinate Initial	PAC	Aircraft identification Departure Aerodrome Destination Aerodrome Boundary estimate data	Aircraft identification SSR Mode and Code (where applicable) Departure Aerodrome Destination Aerodrome Boundary estimate data	Flight rules Type of flight Number of aircraft (if more than one in the flight) Aircraft type Wake turbulence category CNS equipment Route Amended destination Code (SSR) Other information	Flight rules Number of aircraft Aircraft type Wake turbulence category Equipment Route Other information	

ICAO AIDC message	PAN ICD AIDC message	ICAO AIDC message	PAN ICD AIDC message	ICAO AIDC message	PAN ICD AIDC message	
		Mandatory data fields		Optional data fields		O
Coordinate Negotiate	CDN	Aircraft identification Departure Aerodrome Destination Aerodrome Boundary estimate data	Aircraft identification SSR Mode and Code (where applicable) Departure Aerodrome Destination Aerodrome Boundary estimate data	Flight rules Type of flight Number of aircraft (if more than one in the flight) Aircraft type Wake turbulence category CNS equipment Route Amended destination Code (SSR) Other information	Equipment Boundary estimate data Route Other information Amended destination	Opt
Coordinate Accept	ACP		Aircraft identification SSR Mode and Code (where applicable) Departure Aerodrome Destination Aerodrome	Aircraft identification Departure aerodrome Destination aerodrome		
Coordinate Reject	REJ		Aircraft identification SSR Mode and Code (where applicable) Departure Aerodrome Destination Aerodrome	Aircraft identification Departure aerodrome Destination aerodrome		
Coordinate Standby	N/A			Aircraft identification Departure aerodrome Destination aerodrome		
Coordinate Cancel	MAC	Aircraft identification Departure aerodrome Destination aerodrome	Aircraft identification SSR Mode and Code (where applicable) Departure Aerodrome Destination Aerodrome	Fix Reason for cancellation	Boundary Estimate Data Other Information	Nev Nev

ICAO AIDC message	PAN ICD AIDC message	ICAO AIDC message	PAN ICD AIDC message	ICAO AIDC message	PAN ICD AIDC message	
		Mandatory data fields		Optional data fields		O
Coordinate Update	TRU	Aircraft identification Departure aerodrome Destination aerodrome Boundary estimate data	Aircraft identification SSR Mode and Code (where applicable) Departure Aerodrome Destination Aerodrome Track data	Flight rules Type of flight Number of aircraft (if more than one in the flight) Aircraft type Wake turbulence category CNS equipment Route Amended destination Code (SSR) Other information		
Transfer Initiate	N/A	Aircraft identification Executive Data (if available		Track Data		
Transfer Conditions Proposal	N/A	Aircraft identification Executive data (if available		Track Data		
Transfer Conditions Accept	N/A	Aircraft identification		Frequency		
Transfer Communication Request	N/A	Aircraft identification		Frequency		
Transfer Communication	N/A	Aircraft identification Executive data and/or Release indication (if available)		Frequency Track data		
Transfer Communication Assume	N/A	Aircraft identification				
Transfer Control Transfer Proposal	TOC	Aircraft identification	Aircraft identification SSR Mode and Code (where applicable) Departure Aerodrome Destination Aerodrome	Departure Aerodrome Destination Aerodrome Executive data	Departure Aerodrome Destination Aerodrome Executive data	Alw Alw Nev

ICAO AIDC message	PAN ICD AIDC message	ICAO AIDC message	PAN ICD AIDC message	ICAO AIDC message	PAN ICD AIDC message	
		Mandatory data fields		Optional data fields		O
Transfer Control Assume Transfer Assume	AOC	Aircraft identification	Aircraft identification SSR Mode and Code (where applicable) Departure Aerodrome Destination Aerodrome	Departure Aerodrome Destination Aerodrome	Departure Aerodrome Destination Aerodrome	Alw Alw
General Point	N/A	Aircraft identification Departure aerodrome Destination aerodrome		Sector designator (sending) Sector designator (receiving) Flight rules Type of flight Number of aircraft (if more than one in flight) Aircraft type Wake turbulence category CNS equipment Route Track data Code (SSR) Other information		
General Executive Data	N/A	Aircraft identification		Executive data Frequency		
Track System	NAT		NAT track system name NAT tracks		Generation time Start time Stop time Other information	Opt Alw Alw Opt
Free Text Emergency	EMG	Facility designation or Aircraft identification Free text	Functional address or Aircraft identification SSR Mode and Code (where applicable) Other information			

ICAO AIDC message	PAN ICD AIDC message	ICAO AIDC message	PAN ICD AIDC message	ICAO AIDC message	PAN ICD AIDC message	
		Mandatory data fields		Optional data fields		O
Free Text General	MIS	Facility designation or Aircraft identification Free text	Functional address or Aircraft identification SSR Mode and Code (where applicable) Other information			
Application Accept	LAM					
Application Reject Application Error	LRM	Error code	Other information Message type Component type Error code	Error data	Error data	Opt
Application Status	ASM	N/A	N/A			
N/A	FAN		Aircraft identification SSR Mode and Code (where applicable) Departure aerodrome Destination aerodrome Application data			
N/A	FCN		Aircraft identification SSR Mode and Code (where applicable) Departure aerodrome Destination aerodrome Communication status			
N/A	ADS		Aircraft identification SSR Mode and Code (where applicable) Departure aerodrome Destination aerodrome ADS-C data			

Chapter 10. Interim Operational Support

10.1 Introduction

10.11 This ICD describes the end-state messages to be used within the ~~ASIA/PAC~~ NAT/APAC regions to ensure interoperability between automated ATS systems. However, during the transition to this end state architecture, current operations must be documented and supported. This chapter is the repository of messages not found in other ICD sections which will be used to support current operations during the interim transition period.

10.12 Each interim message will be described in a separate paragraph. Those ATS Providers employing an interim message contained in this chapter shall document this usage in the appropriated bilateral agreements.

10.2 Interim messages

10.21 Estimate (EST) message.

10.21.1 The Estimate message is contained within the Core Message set. However, its use has been constrained to those situations in which a flight will cross an FIR boundary in accordance with existing letters of agreement.

10.21.2 An EST message may be used in any situation in which a CPL is permitted. The EST is in actuality an abbreviated CPL contingent upon prior receipt of route and ancillary information. This information could be provided by an FPL or ABI message.

10.21.3 Those ATS Provider States employing an EST in the more general manner during the interim transition period shall document this usage in the appropriate bi-lateral agreements.

10.21.4 The EST message format shall be as described in the Core Message set.

Chapter 11. NAT/EUR ATS Interface Messages

11.1 Introduction

11.11 The following section describes those messages used by NAT ATS systems for On-Line Data Interchange between NAT provider States adjacent to the European Region.

11.2 Regional interface message group

11.21 This group describes several messages used by ATS Providers to interface with European domestic systems.

REGIONAL INTERFACE MESSAGES	
Flight Planning	DLA (Delay
Co-ordination	ACT (Activation)
	DEP (Departure)
	ACT (ACTIVATE) – Prestwick/Shannon
	OCM (Oceanic Clearance)

11.22 Flight planning messages.

11.22.1 DLA (Delay).

11.22.1.1 Purpose.

11.22.1.1.1 Used to indicate a delay in a flight's departure time.

11.22.1.2 Message format.

ATS Field	Description
3	Message type, DTSN
7	Aircraft identification
13	Departure aerodrome and time
16	Destination aerodrome

Example

(DLAS/0456-EIN105-EINN1400-KJFK)

11.23 Coordination messages.

11.23.1 ACT (Activation).

11.23.1.1 Purpose.

11.23.1.1.1 Used to activate a flight in the receiving system. The ACT provides the latest information on a flight and is normally sent subsequent to an ABI.

11.23.1.2 Message format.

ATS Field	Description
3	Message type, DTSN
7	Aircraft identification
13	Departure aerodrome
14	Boundary estimate data
16	Destination aerodrome
22	Amendment

Field 22 will contain Field 9 to specify aircraft type and field 15 to permit transmission of the next reporting point after the boundary crossing.

Example

(ACTO/P487-BAW179-KJFK-ETIKI/0703F370
-EGLL-9/B743-15/QPR)

11.23.2 DEP (Departure)

11.23.2.1 Purpose.

11.23.2.1.1 Used to indicate a flight's actual departure time.

11.23.2.2 Message format.

ATS Field	Description
3	Message type, DTSN
7	Aircraft identification
13	Departure aerodrome and time
16	Destination aerodrome

Example

(DEPS/0476-EIN105-EINN1300-KJFK)

11.23.3 ACT (Activate Message [Shanwick to Shannon]).

11.23.3.1 Purpose.

11.23.3.1.1 Used to inform the receiving centre of boundary estimates for flights transiting or infringing the Shanwick/Shannon common boundary including flights transiting NOTA.

11.23.3.2 Message format.

ATS fields: 3, 7, 9, 13, 14, 15, 16

Message Content:

Field Type		***Contents of Field***	***Example***
		Start of ATS DATA *(open bracket)*	
3	Message Type and DTSN	Message type "ACT" followed by "O/S" followed by three numerics in the range 000 to 999	(ACT/S010
		Start of Field *(single hyphen)*	
7	Flight Callsign	Between three and seven alphanumeric characters	-BAW250
		Oblique stroke	
	SSR Mode and Code	"A" followed by four "1" numeric characters	/A1111
		Start of Field *(single hyphen)*	
13	Departure Airfield	Four alphabetic characters being the ICAO location indicator	-KJFK
		Start of Field *(single hyphen)*	
14	Boundary Point	Up to five alphabetic characters *or* Geographical coordinates	-MALOT 5330N01500W
		Oblique stroke	
	Boundary Estimate and Flight Level	Two numerics in the range 00 to 23 followed by two numerics in the range 00 to 59 then F followed by three numerics	/0700F330
		Start of Field *(single hyphen)*	
16	Destination Airfield	Four alphabetic characters being the ICAO location indicator	-EGLL
		Start of Field *(single hyphen)*	
9	Aircraft Type	The field ident "9/" followed directly by either: a) Between two and four characters d defining the aircraft type as per ICAO Doc 8643 [Reference 5] *or* b) As a) above preceded by one or two numerics giving the number of aircraft n t he flight	-9/GLF2, -9/C12 or 9/B762 -9/02F16
		Oblique stroke	
Wake Turbulence Category		H – Heavy M – Medium L – Light Note: If the WTC is unknown, Shanwick will default to sending /H	/H /M /L

Field Type		Contents of Field	Example
Start of Field *(single hyphen)****[only if field 15 present]***			
15	Next Route Point (optional field)	The field ident "15/" followed directly by one of the following: a) Two numerics followed by "N" followed by three numerics followed by "W" b) Four numerics followed by "N" followed by five numerics followed by "W" c) Up to five alphabetic characters	 -15/15N012W 15/5240N01406W -15/DOLIP
End of ATS Data *(close bracket)*			)

Example:

(ACTO/S575-BAW250/A1111-KJFK-MALOT/0700F330-EGLL-9/B762/H-15/DOLIP)

11.23.4 OCM (OCEANIC CLEARANCE MESSAGE).

11.23.4.1 Purpose.

11.23.4.1.1 Used to inform Shannon ACC of Oceanic Clearances issued by Shanwick to any flight entering Shanwick OCA from Shannon FIR/UIR or SOTA including flights transiting the NOTA.

11.23.4.2 Message format.

ATS fields 3, 7, 9, 13, 14, 15, 16, 22 (optional)

Message Content:

Field Type		Contents of Field	Example
Start of ATS Data *(open bracket)*			
3	Message Type and DTSN	"OCM" followed by "O/S" followed by three numerics in the range of 000 to 999	(OCMO/S539)
Start of Field *(single hyphen)*			
7	Flight Callsign	Between three and seven alphanumeric characters	-IBE416A
Start of Field *(single hyphen)*			
9	Aircraft Type	a) Between two and four characters defining the aircraft type as per ICAO Doc 8643 [Reference 5] *or* b) As a) above preceded by one or two numerics giving the number of aircraft in the flight	-GLF2, -C12 or -B762 -02F16
Start of Field *(single hyphen)*			
13	Departure Airfield	Four alphabetic characters being the ICAO indicator	-EGLL

Field Type		***Contents of Field***	***Example***
		Start of Field *(single hyphen)*	
15	Aircraft Speed	a) "M" followed by three numerics giving the Mach Number *or* b) Four numerics giving the True Airspeed in knots (not to stated standard)	-M079 -0410
	Flight Level	"F" followed by three numerics	F310
		Space	
	Boundary Coordinate	Up to five alphabetic characters *or* *Geographical coordinates*	LIMRI 5310N01500W
		Oblique Stroke	
	Boundary Estimate	Two numerics in the range of 00 to 23 followed by two numerics in the range of 00 to 59	/1357
Field Type		***Contents of Field***	***Example***
	Subsequent Oceanic Route	The text "NAT" followed by one or two alphabetic characters or A random route defined as geographical coordinates and/or named points separated by <sp> in the format: a) Two numerics followed by "N" followed by three numerics followed by "W" b) four numerics followed by "N" followed by five numerics followed by "W" c) Between two and five alphabetic characters	NATG 49N020W 4832N02814W BANCS
		Start of Field *(single hyphen)*	
16	Destination Airfield	Four alphabetic characters being the ICAO indicator	-KJFK

Field Type		***Contents of Field***	***Example***
Start of Field *(single hyphen)* ***[only if Field 22 present]***			
22	Other information (operational field)	The text "ATC/<sp>" and one or more of the following fields in any order each separated by a <sp> NBT (i.e. not before time)<sp>time<sp>ATC restriction point* NLT (i.e. not later than)<sp>time<sp> ATC restriction point* EPC (i.e. entry point change) INT (i.e. interval)<sp>callsign<sp>+<sp> interval in minutes LCHG (i.e. level change) RTD (i.e. return to domestic) and/or RECLEARANCE <sp> one numeric in the range of 1 to 7 *ATC restriction point takes one of the following formats: a) Up to five alphabetic characters or b) Two numeric followed by "N" and underscore followed by two numeric followed by "W"	ATC/ NBT 1357 49N_10W NLT 1357 49N_10W EPC INT BBB213 + 10 LCHG RTD RECLEARANCE 2
End of ATS Data *(close bracket)*			**)**

Example

(OCMO/S400-ELY027-B743-EGLL-M084/F330 LIMRI/1348 NATG-KJFK)

(OCMO/S475-DAL85-B762-LFMN-M082F330 LIMRI/1335 53N020W 54N030W 54N040W 53N050W YAY-KJFK-ATC/INT VIR015 + 08 RECLEARANCE 1)

(OCMO/S478-UAL919-B744-EGLL-M085F350 MASIT/1356 NATG-KIAD-ATC/NBT 1356 MASIT INT DAL49 + 16)

(OCMO/S919-DLH408-A343-EDDL-M083F370 DOGAL/1441 NATE-KJFK-ATC/ EPC INT WIN111 +10)

(OCMO/S928-OAL881-B762-LGAV-M080F350 SOMAX/1451 51N020W 52N030W 52N040W 50N050W YQK-KJFK-ATC/ LCHG NBT 1451 SOMAX)

Appendix A Templates for Bilateral Letter of Agreement on AIDC

At an organizational level, the implementation of AIDC to enable data transfers between automated ATS systems is accomplished under the authority and strict operational terms of a bilateral letter of agreement or memorandum of understanding on AIDC arrangements that must be established between the two ATSUs involved. Depending on the particular circumstances, the legally less sophisticated Memorandum of Understanding (MOU) format could be used for the initial implementation of AIDC until the more formalized Letter of Agreement (LOA) is put in place. The choice of legal instrument will be a decision made by the two ATSUs as they prepare the formal agreement to enable AIDC data transfer between States.

In order to provide guidance in the structure and content of bilateral arrangements, templates have been included in this appendix to assist States in preparing suitable memorandums of understandings/letters of agreement on AIDC arrangements. The templates are based upon documentation developed by Airways New Zealand in implementation evolving AIDC arrangements between Auckland Oceanic and all neighbouring States over a period of approximately 10 years commencing from the mid 1990's. Three templates are included:

Template 1 provides a generic example of a basic Letter of Agreement

Template 2 is an example of an actual Letter of Agreement between Auckland Oceanic (New Zealand) and Brisbane ATS Centre (Australia); and

Template 3 is an example of an actual Memorandum of Understanding between Auckland Oceanic (New Zealand) and Nadi ATM Operations Centre (Fiji).

The templates are intended as guidance material only. It is important to note that although changes in the AIDC arrangements applicable to Auckland Oceanic will occur over time, Templates 2 and 3 will NOT be routinely updated. Accordingly, as the circumstances for each bilateral implementation will differ, appropriate adjustments should be made to the content of the templates to ensure that the resulting MOU or LOA is fit for the purpose intended.

Template 1

Generic Letter of Agreement

AIDC Procedures

1. The format of AIDC messages (*List messages used e.g. ABI, PAC, CDN, CPL, ACP, REJ, MAC, LAM and LRM)* are as defined by the Asia/Pacific/North Atlantic Regional AIDC Interface Control Document (ICD) as amended from time to time, unless described otherwise in this LOA.

2. List messages not supported (*e.g. "EST, TOC, AOC* messages are not supported").

3. Acceptance of CPL or CDN message is approval of the flight's profile and requires no further voice communication (i.e. Non-Standard Altitudes, Block Altitudes, and Deviations).

4. (*Describe other procedures applicable to the use of AIDC for this LOA. Some examples are listed below)*

    a. *Example only. If there is any doubt with regard to the final coordination data, voice coordination shall be used for confirmation.*

    b. *Example only. Receipt of a MAC message must not be interpreted as meaning that the flight plan has been cancelled. Voice coordination must be conducted by the transferring controller to confirm the status of the flight.*

    c. *Example only. Each facility shall advise the other facility of any known equipment outage that affects AIDC. In the event of AIDC outage, voice communication procedures will apply.*

    d. *Example only. Truncation. Where route amendment outside the FIR is unavoidable.*

        i. *Terminate the route details at the farthest possible flight plan significant point of the flight and enter "T" immediately following this.*

        ii. *Without amending the originally received details, every effort is to be made to truncate the route at a minimum of one significant point beyond the adjacent FIR to provide an entry track in that FIR.*

AIDC Messages

(For each message used describe when it will be sent by each ATSU under the parameter column and use the Notes column to describe other applicable information for the message use by each ATSU. The data below provides an example of the type of information that could be incorporated.)

Messages	**Parameter**	**Notes**
ABI	***ATSU1*:** Sends ABI approx. 80 minutes prior to boundary (73 min prior to the 50 nm expanded sector boundary). ***ATSU2:*** Sends ABI approx. 87 minutes prior to boundary (80 min prior to the 50 nm expanded sector boundary). *(Note: An updated ABI will not be sent once a CPL has been sent.)*	***ATSU1 : ATSU2*** *Updated ABI's will be sent automatically if there is any change to profile. ABI is sent automatically and is transparent to the controller. ABI automatically updates the receiving unit's flight data record.*
CPL	***ATSU1 : ATSU2*** *Send CPL messages approx 37 minutes prior to the boundary (30 minutes prior to the 50 nm expanded sector boundary).*	***ATSU1 : ATSU2*** *CPL messages should be sent by the transferring controller in sufficient time to allow the completion of coordination at least 30 minutes prior to the boundary or 30 minutes prior to the aircraft passing within 50nmof the FIR boundary for information transfers.*
CDN	***ATSU1 : ATSU2*** *CDN messages are sent by either the transferring or receiving facility to propose a change once the coordination process has been completed, i.e., CPL sent and ACP received. CDN's must contain all applicable profile restrictions (e.g. weather deviations, speed assignment, block altitude). If the use of a CDN does not support this requirement, then verbal coordination is required.*	***ATSU1 : ATSU2*** *The APS will display a flashing "DIA" until receipt of ACP. If ACPJ not received within ten (10) minutes, controller is alerted with a message to the queue.* *CDN messages are not normally used for coordination of reroutes; however, with the receiving facilities approval a CDN may be used to coordinate a reroute on a critical status aircraft such as in an emergency.*
PAC	***ATSU1 : ATSU2*** *PAC messages will normally be sent when the time criteria from the departure point to the boundary is less than that stipulated in the CPL.*	***ATSU1 : ATSU2*** *Will respond to a PAC message with an ACP. PAC messages shall be verbally verified with receiving facility.*
ACP	***ATSU1 : ATSU2***	***ATSU1 : ATSU2*** *The APS will display a flashing "DIA" until receipt of ACP. If ACP not received within ten (10) minutes, controller is alerted with a message to the queue.*

Messages	**Parameter**	**Notes**
TOC	***ATSU1 : ATSU2*** *Not supported. Implicit hand in/off.*	***ATSU1 : ATSU2***
AOC	***ATSU1 : ATSU2*** *Not supported. Implicit hand in/off.*	
MAC	***ATSU1 : ATSU2*** *MAC messages are sent when a change to the route makes the other facility no longer the "next" responsible unit.*	***ATSU1 : ATSU2*** *Receipt of a MAC message must not be interpreted as meaning that the flight plan has been cancelled. Voice coordination must be conducted by the transferring controller to confirm the status of the flight.*
REJ	***ATSU1 : ATSU2*** *REJ messages are sent in reply to a CDN message when the request change is unacceptable*	***ATSU1 : ATSU2*** *REJ messages are sent only as a response to a CDN message.*

Template 2

***Example*: Auckland Oceanic – Brisbane ATS Centre**

Letter of Agreement

Coordination – General

Transfer of Control Point

The Transfer of Control Point (TCP) shall be either on receipt of an Acceptance of Control (AOC) to a Transfer of Control (TOC) or the common FIR boundary, whichever occurs first. The TCP shall also be the point of acceptance of primary guard.

All ATS units shall coordinate an estimate for the FIR boundary at least thirty (30) minutes prior to the boundary. Such coordination constitutes an offer of transfer of responsibility.

After the estimate for the FIR boundary has been sent, units shall coordinate any revised estimate that varies by 3 minutes or more.

Communication Systems

Use of communications systems coordination between adjacent units shall be in the following order of priority:

a. ATS Interfacility Data Communication (AIDC)
b. AIDC messages and procedures are specified in the following sections;
c. ATS direct speech circuits;
d. International telephone system;
e. Any other means of communication available.

AIDC Messages

AIDC message format will be in accordance with the Asia/Pacific/North Atlantic Regional Interface Control Document (ICD), as amended from time to time, unless described otherwise in the LOA.

Successful coordination via AIDC occurs on receipt of an ACP message in response to an EST message.

Each centre shall advise the other of any known equipment outage that affects AIDC.

AIDC Message Parameters

The following table details the AIDC parameters and message to be used.

Message	Parameter	Notes
ABI	EUROCAT: 5-60 minutes prior to COP (Note: An updated ABI will not be sent once an EST has been sent) OCS: 40 minutes prior 50nm expanded boundary	ABI is sent automatically and is transparent to controller. ABI automatically updates flight plan.
EST	EUROCAT: 40 minutes prior to COP OCS: 40 minutes prior 50mn expanded boundary	Any changes to EST level or estimate conditions as detailed in LOA to be notified by voice after initial coordination completed. See notes below on voice procedures. EST is required to track generation in EUROCAT.
ACP	EUROCAT: Sends automatic ACP on receipt of EST OCE: Sends automatic ACP on receipt of EST	EUROCAT: If ACP not received within 4 minutes the sending controller is alerted. Sending controller will initiate voice coordination if ACP is not received within 4 minutes of sending EST. Receiving controller will initiate voice coordination if proposed EST conditions are not acceptable. OCS: If ACP is not received within 5 minutes the sending controller is alerted. Sending controller will not initiate voice coordination if ACP is not received within 5 minutes of sending EST. Receiving controller will initiate voice coordination if proposed EST conditions are not acceptable.
TOC	EUROCAT: Sent automatically 5 minutes prior to boundary OCS: Sent automatically 2 minutes prior to boundary	
AOC	EUROCAT: Sent automatically on controller acceptance of a TOC OCS: Sent automatically on receipt of a TOC	

Coordination – General, Continued

AIDC Message (continued)
Parameters

Message	Parameter	Notes
CDN	EUROCAT: Manually by the controller when required	• Responses to the CDN shall be ACP or REJ only – there will be no CDN negotiations. • CDN messages will be sent by Brisbane only to revise coordination on eastbound flights. • CDN messages may be used to coordinate changes to estimate or assigned altitude only. • Only on CDN dialogue may be open per aircraft at any time. • Not to be used if the aircraft will not be maintaining the assigned altitude 10 minutes prior to the TCP.
MAC	As per ICD	
LRM	As per ICD. Controller alerted on receipt	
LAM	As per ICD. Controller alerted on non-receipt	

Amendment to Flight Data Record

Route amendment – routes/waypoints may be added/deleted as long as they do not change the original intent or integrity of the flight plan information.

Truncation – where route amendment outside the FIR unavoidable:

a. Terminate the route details at the farthest possible 'flight planned' point of the flight outside the FIR and enter "T" immediately following this.
b. If insufficient 'flight planned' point exist outside the FIR for truncation, insert the first 'defined' point in the adjoining FIR and enter "T" immediately following this.
c. The minimum acceptable truncation point must be at least the first point in the adjoining FIR.
d. Every effort is to be made to truncate the route at a minimum of one point beyond the adjacent international FIR to provide an entry track in to that FIR.

Continued on next page

Coordination – General, Continued

Address Forwarding And Next Data Authority

Brisbane ATSC and Auckland OAC shall send automatic Next Data Authority (NDA) and Address Forwarding (CAD) for data link aircraft as per the following table:

Brisbane ATSC	Auto NDA sent 22 minutes prior to the FIR boundary Auto CAD sent 20 minutes prior to the FIR boundary
Auckland OAC	Auto NDA sent 40 minutes prior to the FIR boundary Auto CAD sent 35 minutes prior to the FIR boundary

Voice Coordination

Voice coordination is not required when AIDC messaging has been successful to offer and accepts transfer of control.

However, the receiving controller will initiate voice coordination if the proposed AIDC EST conditions are not acceptable.

If AIDC messaging is not to be sent following voice coordination, it shall be stated as part of the voice coordination by use of the phrase "AIDC messaging will not be sent". A read back is required.

Voice Coordination is required for aircraft operating under any of the following conditions:

- block level clearance;
- weather deviations;
- offset track; or
- Mach Number technique.

Read backs shall comprise all elements of the voice coordination passed by the transferring controller. Read back by the receiving unit confirms acceptance of the offer of transfer of control subject to any other conditions negotiated.

Hemstitch Flights

A hemstitch flight is any flight that will remain within the New Zealand FIR for less time than the NDA VSP (40 minutes) prior to the flight entering the Brisbane FIR.

Auckland AOC shall voice coordinate any hemstitch flight.

Continued on next page

Coordination – General, Continued

Near Boundary ATS units shall relay significant details of any flight which is, or intends **Operations** operating within fifty nautical miles (50NM0 of the common FIR boundary.

HF Frequencies Brisbane ATC and Auckland ATC shall update each other as to the current voice backup frequency for use by ATC data link equipped aircraft.

Template 3

Example: Auckland Oceanic – Nadi ATM Operations Centre

Memorandum of Understanding
Between
Airways New Zealand Limited
And
Nadi ATM Operations Centre

Subject **Air Traffic Services Inter-facility Data Communications (AIDC) Coordination Procedures**

Validity Period This Memorandum of Understanding shall be effective from 0506300300 UTC and may be cancelled by either party with written notice.

Signatories The following signatories have ratified this Agreement:

Authority	**Signature**	**Date**
(Name of Officer) Oceanic Business Unit Manager Airways New Zealand		
(Name of Officer) Manager, Operations Strategic Air Services Limited Fiji		
(Name of Officer) Chairman, ATM Projects Committee, Airports Fiji Limited Fiji		

Continued on next page

Memorandum of Understanding, Continued

Purpose To establish procedures to permit AIDC messages for coordination purposes to be transmitted by Auckland Oceanic and received by Nadi Air Traffic Management Operations Centre (ATMOC).

Scope This MOU between Auckland and Nadi is supplementary to the procedures contained in the Airways Corporation of New Zealand Limited and Airport Fiji Limited LOA, dated 25 November 2004. Revision to this MOU shall be made only with the concurrence of all parties.

Procedures The format of AIDC messages (ABI, EST, PAC, CDN, CPL, ACP, REJ, TOC, AOC, MAC, LAM and LRM) is defined by the Asia/Pacific/North Atlantic Regional AIDC Interface Control Document (ICD) version 2.0. The optional formats for the coordination of block levels, weather deviations and Mach Number Technique have not been implemented.

Each facility shall advise the other facility of any known equipment outage that will affect AIDC. In the even of AIDC outage, voice coordination procedures will apply.

The following table details the messaging parameters and additional information for each message.

Message	**Parameter**	**Notes**
ABI Non Hem-stitching flights	**Auckland:** Sends ABI 48 minutes prior to boundary (Note: An updated ABI will no be sent once an EST has been sent)	Updated ABIs will be sent automatically if there is any change to profile. ABI is sent automatically and is transparent to the controller. ABI automatically updates the receiving units flight data record
EST (general) Non Hem-stitching flights	**Auckland:** Sends EST 38 minutes prior to boundary	EST is sent automatically and automatically coordinates the receiving unit's flight data record. Any change to the EST (level or estimate) conditions as detailed in LOA are to be notified by voice after the initial coordination completed. See section below on voice procedures
ABI & EST Hem-stitch flights	**Auckland:** Sends ABI & EST messages for flights that re-enter the Nadi FIR as soon as the aircraft enters NZZO FIR	In these cases the ABI and EST are sent automatically
PAC	**Auckland:** Voice coordination will take place in those situations when a PAC is sent	

Continued on next page

Memorandum of Understanding, Continued

Message	Parameter	Notes
ACP	**Auckland:** Sent automatically on receipt of EST **Nadi:** Sent automatically on receipt of EST or PAC	**Auckland:** The APS will display a flashing "DIA" until receipt of ACP. If ACP not received within ten (10) minutes, controller is alerted with a message to the queue
TOC	**Auckland:** Sent automatically 2 minutes prior to boundary	This proposes a hand-off to the receiving unit
AOC	**Auckland:** Sent automatically on receipt of TOC **Nadi:** Sent by the controller on acceptance of TOC	This completes the hand-off proposal
MAC	**Auckland:** Sent manually when a change to the route makes Nadi no longer the "next" responsible unit	Receipt of a MAC message should not be interpreted as meaning that the flight plan has been cancelled. Voice coordination should be conducted by the receiving controller to confirm the status of the flight

Procedures, Continued

Block levels, offsets, and weather deviations, or Mach Number Techniques are not included in the current version of AIDC messaging. Voice coordination shall be conducted for aircraft operating under these circumstances.

If there is any doubt with regard to the final coordination conditions, voice coordination shall be used for confirmation.

Truncation – Where route amendment outside the FIR is unavoidable:

- Terminate the route details at the farthest possible 'flight planned' point of the flight and enter "T" immediately following this.
- Without amending the originally received details, every effort is to be made to truncate the route a minimum of one point beyond the adjacent FIR to provide an entry track in to that FIR

For any reason where changes to this MOU are advisable the requesting unit shall propose the pertinent revision. The revision should be emailed of faxed to the appropriate Manager for action. The Manager or the designated deputies shall agree by email or telephone, followed by a confirming fax message signed by all parties. Formal exchange of signed copies of the amended MOW shall take place as soon as practicable thereafter.

Hemstitch Flights

A Hemstitch flight is any flight that vacates FIR 1 and transits FIR 2 before re-entering FIR 1.

When a hemstitching flight vacates FIR 1 and then re-enter FIR 2 30 minutes or less later, the re-entry coordination is considered to have been completed when coordination for the initial entry is completed and further coordination is only required if the aircraft requests:

Continued on next page

Memorandum of Understanding, Continued

- A weather deviation, or
- A level change, or
- Any change to the EST time is received or
- If there is any doubt that the receiving FIR has the correct boundary information

AIDC messages (ABI and EST) will still be sent by Auckland, but only when the aircraft flight state becomes active control. For hem stitching flights this will usually be when the aircraft enters the NZZO FIR, therefore these messages will normally be sent at less that 30 minutes prior to the TCP.

Voice Coordination

The following is provided as a summary of occasions when voice coordination is required:

- In the event of an AIDC outage;
- Aircraft operating under any of the following conditions:
  - Block level clearance;
  - Unfulfilled time constraints;
  - Weather deviations;
  - Offset track; or
  - Mach Number technique
- Any change to the EST (level or time) conditions;
- On receipt of a warning that an ACP has not been received;
- On receipt of a MAC message;
- If there is any doubt with regard to the final coordination conditions;
- If the receiving controller can not accept the aircraft at the coordinated level

Notwithstanding the above, voice coordination shall take place for any flight that departs an airfield within the NZZO FIR and enters the NFFF FIR within 30 mins after departure.

For aircraft on fixed routes this specifically applies to:

- Aircraft departing Norfolk and entering the Nadi FIR via UBDAK or OSVAR/
- Aircraft departing Fua'amotu and entering the Nadi FIR via APASI;
- Aircraft departing Faleolo and entering the Nadi FIR via OVLAD or KETOT

Continued on next page

Memorandum of Understanding, Continued

Auckland OCA will obtain the appropriate level approval for these flights and will pass Nadi an "Estimate" based on the aircrafts probed profile at the same time as obtaining the level approval.
A PAC message will also be sent containing the time at the TCP and the climbing condition.
Time revisions will only be passed when the "Estimated" time changes by more than 2 minutes from that previously passed.
Level changes to that previously coordinated and/or off track request shall be verbally coordinated in the usual manner.

Notification of Descent Restrictions by Nadi

Auckland OCS controllers may issue descent to aircraft entering the NZZO FIR from the NFFF FIR and landing at Norfolk, Tonga or Samoa without requesting descent restrictions from Nadi provided descent is commenced after the aircraft has passed the following positions. Should Nadi have any restrictions for descent, they will advise Auckland at least 10 mins prior to these positions:

For aircraft entering NZZO FIR via:

- UPDAK descent to commence after NOGOL
- OSVAR descent to commence after OSVAR minus 10 mins
- APASI descent to commence after ASAPI
- All other occasions, descent to commence after the aircraft has crossed the FIR boundary.

Legend for Cat Column (Optional):
E – Editorial
R – Review
C – Confusing, clarification, erroneous information, inconsistency, or invalid argument
A – Additional material
S – Serious – resolution of comment requires special attention

Legend for Status Column
R – Comment resolution incorporated into current version, as indicated.
O – Open comments planned for resolution at next version.
D – Open comments that will be deferred until after initial release.

Comments and contributions received from the following. Initials are used throughout the comment matrix.

Initials	Surname	First names	Representation	Telephone	eMail
JB	Brooks	Joe	TASC supporting FAA Technical Performance Group	202 315 1254	joseph.brooks@auatac.com
LSM	McCormick	Leslie	CSSI supporting FAA Oceanic & Offshore Operations	417-546-2412	lmccormick@cssiinc.com
P	Radford	Paul	Airways New Zealand	+64 21 334806	paul.radford@airways.co.nz
AW	Watkin	Adam	Airservices Australia	+617 3866 3421	adam.watkin@airservicesaustralia.com
KC	Chiodini	Karen	FAA – PAN ICD Coordinator	202 385 8931	Karen.L.Chiodini@faa.gov

Paragraph reference	Comment Number	Comment Author	Description of comment and proposed resolution	Cat	Resolution History	Status
Table of Contents (ToC)	[Leave blank]	JB	**COMMENT**: The ToC doesn't refer to or list the foreword, pp. viii-ix, which contains 3 sections: Historical background, Scope, and Document amendment. **SUGGESTED CHANGE TO DOCUMENT**: Include above in TOC?	E	FOREWARD added to ToC that includes: 1. Historical background 2. Scope 3. Document amendment	R
Page viii 2.3		JB	**COMMENT**: The first sentence: … Flight Planning function is required … to support operations within the APAC Region. There is no mention of the NAT region. **SUGGESTED CHANGE TO DOCUMENT**: Add NAT region reference.	C	Suggested change incorporated.	R
Page viii 2.5 a & d,		JB	**COMMENT**: The comments indicate these elements are taken from the NAT ICD Executive Summary. In fact they	E	Text revised to reflect wording in APAC/NAT ICDS. Comments revised to reflect source docs.	O

Paragraph reference	Comment Number	Comment Author	Description of comment and proposed resolution	Cat	Resolution History	Status
Comments Boxes ATO8 and ATO11			are a combination and rewording of NAT and APAC (par 0.4) language. **SUGGESTED CHANGE TO DOCUMENT**:			
Chapter 1 Acronyms		JB	**COMMENT**: All acronyms from NAT and APAC ICDs were captured. One acronym, GOLD, was added and was stated as being in the APAC ICD. However, I couldn't find this in the current APAC or NAT ICDs. Source of acronym can be found in Global Operational Data Link Document (GOLD), Edition 1.0, 14 June 2010 and other ICAO subject matter documents **SUGGESTED CHANGE TO DOCUMENT**:	C	Comment revised to reflect source doc for GOLD.	R
2.2.4		JB	**COMMENT**: 2.2.4 captures: "Flight plans shall continue to be filed in accordance with existing procedures." This is common to both NAT and APAC, but NAT also includes (in Part 1, 2.2.4) "… operators shall continue to file flight plans in accordance with existing procedures <u>and they shall make every effort to ensure that flight plans are disseminated to all the correct addresses.</u>" Does this need to be carried into the PAN ICD? **SUGGESTED CHANGE TO DOCUMENT**:	A	NAT ICD text added to para 2.2.4	O
2.34.3.1.2 *Example*		JB	**COMMENT**: *example reads:* BUGGS/0349F350F370/GM085 The in a block of levels between F350 and F370 (inclusive) maintaining M0.85 or greater. <u>aircraft is ofiled</u> **SUGGESTED CHANGE TO DOCUMENT**: *Should read:* BUGGS/0349F350F370/GM085 The <u>aircraft is filed</u> in a block of levels between F350 and F370 (inclusive) maintaining M0.85 or greater.	E	Suggested change incorporated in para 2.34.3.1.2 *Example*	R

Paragraph reference	Comment Number	Comment Author	Description of comment and proposed resolution	Cat	Resolution History	Status
2.35.1		JB	**COMMENT**: *The following from APAC ICD Part 1, 4.5.1 was omitted from the new paragraph:* If transmitted, the offset and weather deviation information shall always be the last information in the group and shall be separated from preceding information by a forward slash delimiter (/). **SUGGESTED CHANGE TO DOCUMENT**: Include?	A	Text added to para 2.35.1	R
2.35.1.2		JB	**COMMENT**: *The following from APAC ICD 4.5.1 was omitted from the new paragraph:* One to three characters indicating an off track distance associated with this clearance (leading zeros shall not be used). **SUGGESTED CHANGE TO DOCUMENT**: Include this added level of detail in the PAN ICD?	A	Text revised in para 2.35.1.2 to reflect detail.	R
2.35.3		JB	**COMMENT**: *APAC ICD Part 1, 4.5.3:* The off-track clearance format described in this section applies only to Field 14 –boundary estimate data – <u>or the Track Data field in a TRU message. It may be transmitted in a TRU message or</u> any AIDC message containing Field 14. *PAN ICD 2.35.3*: The off-track clearance format described in this section applies to Field 14 – boundary estimate data – only. It may be transmitted in any AIDC message containing Field 14. **SUGGESTED CHANGE TO DOCUMENT**: Include the TRU message reference in the PAN ICD?	A	Text added to para 2.35.3 to include TRU message reference.	R
2.36.1		JB	**COMMENT:** Language is almost identical to 2.22, but is slightly more detailed. **SUGGESTED CHANGE TO DOCUMENT**: Is 2.22 necessary?	E	Para 2.22 deleted.	R
2.43.3		JB	**COMMENT:** Time reference *12:30 P.M. Z* **SUGGESTED CHANGE TO DOCUMENT**: Should read 1230Z	C	Text revised to reflect suggested change.	R

Paragraph reference	Comment Number	Comment Author	Description of comment and proposed resolution	Cat	Resolution History	Status
2.43.4		JB	**COMMENT:** Consider using explanatory examples for the message formats shown. **SUGGESTED CHANGE TO DOCUMENT**: Add the examples used in Part 1, 4.3.3 from the NAT ICD.	E	Text added to para 2.43.4 as suggested.	R
2.7		JB	**COMMENT:** Does this duplicate information in *2.35: Offset and WX Deviation Information*? **SUGGESTED CHANGE TO DOCUMENT**: Choose either 2.35 or 2.7	E	Para 2.7 deleted and the associated text added to para 2.35	R
3.21.1		JB	**COMMENT:** This PAN paragraph captures the NAT language from Part 3, 2.2.2 except for the last sentence *"The AFTN date time group may be used by administrations to monitor end to end delay performance of the data exchanges."* **SUGGESTED CHANGE TO DOCUMENT**: Does this need to be added?	A	Text added to para 3.21.1	R
3.22.5		JB	**COMMENT:** Paragraph contains examples from APAC only. **SUGGESTED CHANGE TO DOCUMENT**: Should an example from the NAT ICD (Part 3, 2.1.12) also be shown?	A	Suggested examples added to para 3.22.5	R
3.22.6.2		JB	**COMMENT:** From NAT Part 3, 2.2.2: *The ATS unit organization code for the oceanic ATC application will be ZOZO. This organization code, when used with the ICAO location, forms the full ICAO address.* PAN ICD didn't include this. **SUGGESTED CHANGE TO DOCUMENT**: Should it be added?	A	Suggested text added to para 3.22.6.2	R
4.11		JB	**COMMENT:** Paragraph is a combination of language from NAT and APAC ICDs, but repeats the information from each---looks like it didn't get edited yet. **SUGGESTED CHANGE TO DOCUMENT**: Edit	E	APAC ICD language deleted as redundant.	R

Paragraph reference	Comment Number	Comment Author	Description of comment and proposed resolution	Cat	Resolution History	Status
4.4.1.2		JB	**COMMENT:** *The coordination point preceding the boundary as per bilateral agreement and also shows a full route to destination.* This refers to a different example that was omitted from the NAT ICD. **SUGGESTED CHANGE TO DOCUMENT**: Change to correct explanation from NAT, A-4 2.2.2.3 *This example shows an aircraft cleared to F350 but entering the ACI at or above F310.* Insert missing example from NAT, A-4 2.2.2.3: *(CPL-IBE6123-IS-B747/H-SXWC/C-LEMD-41N030W/1325F350-M084F350 41N030W 41N040W 41N050W 40N060W 38N065W DANER A699 NUCAR DCT HEATT-KMIA-0)* and use *The coordination point preceding the boundary as per bilateral agreement and also shows a full route to destination.*	C	Text revised as suggested.	R
4.4.5.1.1		JB	**COMMENT:** NAT ICD language at the end of the paragraph is redundant; covered by language from the APAC ICD. **SUGGESTED CHANGE TO DOCUMENT**: Delete?	E	NAT ICD language deleted as redundant.	R
4.4.8.3		JB	**COMMENT:** *Each element consist of* **SUGGESTED CHANGE TO DOCUMENT**: Change to *consists*.	E	Text revised as suggested.	R
4.4.8.9.1		JB	**COMMENT:** *when including Offset information in and AIDC message, the direction "E" (either side of track) shall be used.* **SUGGESTED CHANGE TO DOCUMENT**: Change to *shall not be used.*	C	Text revised as suggested.	R
4.6.3.2 3a		JB	**COMMENT:** *The initial TDM date/time message number group will like:* **SUGGESTED CHANGE TO DOCUMENT**: Change to *The initial TDM date/time message number group will look like:*	E	Text revised as suggested.	R

Paragraph reference	Comment Number	Comment Author	Description of comment and proposed resolution	Cat	Resolution History	Status
4.6.3.2 3a		JB	**COMMENT:** *Message numbers 02 and 99 indicate TDM amendments or e revision*. **SUGGESTED CHANGE TO DOCUMENT**: Change to *Message numbers 02 to 99 indicate TDM amendments or revisions*. APAC ICD states 02 **to** 99.	C, E	Text revised as suggested.	R
4.6.3.2 7		JB	**COMMENT:** *The Remarks subfield is a free text field text field…* **CHANGE TO DOCUMENT**: *The Remarks subfield is a free text field ~~text field~~...*	E	Text revised as suggested.	R
4.6.4.2		JB	**COMMENT:** PAN ICD---shows ATS field for message type as **3**; NAT ICD uses **3a** for this field. **CHANGE TO DOCUMENT**: Is this important?	C	Text revised as suggested.	R
GENERAL		JB	**COMMENT:** Several references to other documents use a date or version number. Since these will change as they're updated, the PAN ICD will need to reflect this. **CHANGE TO DOCUMENT**: Make references to ICAO documents generic, for example: instead of *ICAO Annex 10, Chapter 11, 1995* use *ICAO Annex 10, current version.*	E	Text revised as suggested.	R
4.6.4.3.5 6		JB	**COMMENT:** 6...Both numbers shall represent the same digits as referred to b<sp> PARTS-in item Id **1** above. **CHANGE TO DOCUMENT**: TYPO---remove b<sp> PARTS-.	C	Text revised as suggested.	R
4.6.4.3.5 6		JB	**COMMENT:** 6...Beginning of third line: PARTS- **CHANGE TO DOCUMENT**: TYPO---replace with b<sp> PARTS-.	C	Text revised as suggested.	R

Paragraph reference	Comment Number	Comment Author	Description of comment and proposed resolution	Cat	Resolution History	Status
4.6.4.3.5 6		JB	**COMMENT:** 6...**a** and **b** textual numbers (ONE, TWO, THREE, FOUR) or one digit. **CHANGE TO DOCUMENT**: For consistency with previous language change to: **a** and **b** textual numbers (ONE, TWO, THREE, FOUR) or one decimal digit.	C	Text revised as suggested.	R
4.6.4.3.6		JB	**COMMENT: ...**between individual North Atlantic Track descriptions, not with an individual description. **CHANGE TO DOCUMENT**: **...**between individual North Atlantic Track descriptions, not within an individual description.	C	Text revised as suggested.	R
4.6.4.3.6 10		JB	**COMMENT:** PAN ICD...or a LAT/LONG given in degrees and minutes. At present only whole degrees are used. **CHANGE TO DOCUMENT**: From NAT ICD insert: ...or a LAT/LONG given in degrees or degrees and minutes.	C	Text revised as suggested.	R
4.6.4.3.6 11		JB	**COMMENT:** PAN ICD...<cr> **CHANGE TO DOCUMENT**: From NAT ICD should be <crlf>.	C	Text revised as suggested.	R
4.6.4.3.6 16		JB	**COMMENT:** ... the indentation does not indicated the presence... **CHANGE TO DOCUMENT**: the indentation does not indicate the presence...	E	Text revised as suggested.	R
4.6.4.3.6 16		JB	**COMMENT:** **CHANGE TO DOCUMENT**: Insert the word OR before the line: *There is no European link.*	C	Text revised as suggested.	R

Paragraph reference	Comment Number	Comment Author	Description of comment and proposed resolution	Cat	Resolution History	Status
4.6.4.3.6 22		JB	**COMMENT:** The TMI shall be the Julian calendar day in the year – i.e. starting atone **CHANGE TO DOCUMENT**: The TMI shall be the Julian calendar day in the year – i.e. starting at one	E	Text revised as suggested.	R
~~4.7.2.3~~ 4.7.2.4		JB	**COMMENT:** ...following format is used n the RM/ sub-field of the LRM to report... **CHANGE TO DOCUMENT**: ...following format is used in the RMK/ sub-field of the LRM to report...	E	Text revised as suggested.	R
4.7.3.1.1		JB	**COMMENT:** ...when no other application messages have received within... **CHANGE TO DOCUMENT**: ...when no other application messages have been received within...	E	Text revised as suggested.	R
4.7.4.1.1		JB	**COMMENT:** Transmitted by on ATSAU... **CHANGE TO DOCUMENT**: Transmitted by an ATSU...	E	Text revised as suggested.	R
4.7.4.4.1		JB	**COMMENT:** ...contains a number f elements... **CHANGE TO DOCUMENT**: ...contains a number of elements...	E	Text revised as suggested.	R
4.7.4.4.2		JB	**COMMENT:** ... the benefit of downstream ATSUs what may use the information... **CHANGE TO DOCUMENT**: ... the benefit of downstream ATSUs that may use the information...	E	Text revised as suggested.	R
4.7.4.5.1		JB	**COMMENT:** ... the address to which uplink messages are routed to in the avionics. **CHANGE TO DOCUMENT**: Remove either to which or to.	E	The text “to which” was removed.	R

Paragraph reference	Comment Number	Comment Author	Description of comment and proposed resolution	Cat	Resolution History	Status
4.7.4.8.1		JB	**COMMENT:** ... contains the six character hexadecimal translation or the 24 bit aircraft address as it was received... **CHANGE TO DOCUMENT**: or is incorrect---change to of	C	Text revised as suggested.	R
4.7.4.10.1		JB	**COMMENT:** ... receded... **CHANGE TO DOCUMENT**: Change to preceded.	E	Text revised as suggested.	R
4.7.4.10.1		JB	**COMMENT:** ... Fan message... **CHANGE TO DOCUMENT**: Change to FAN (consistent with previous usage).	E	Text revised as suggested.	R
4.7.4.10.2		JB	**COMMENT:** ... FCO identifier consist of three letters... **CHANGE TO DOCUMENT**: Change to consists.	E	Text revised as suggested.	R
4.7.4.10.3		JB	**COMMENT:** ... a FAN message with ADS application... **CHANGE TO DOCUMENT**: Should be ADS-C (consistent with previous usage).	E	Text revised as suggested.	R
4.7.4.10.3		JB	**COMMENT:** ... by that ATSU with the aircraft is only entering the ACI. **CHANGE TO DOCUMENT**: Change to when.	E	Text revised as suggested.	R
4.7.4.10.4 Note 1		JB	**COMMENT:** The NAT ICD adds to the last sentence: ...either allowing a reasonable time for delivery of the NDA message or waiting for a MAS/S message to be received in response. **CHANGE TO DOCUMENT**: Should the PAN ICD include this?	A	Text revised as suggested.	O
Table 4-2		JB	**COMMENT: ...** the aircraft has bee terminated... **CHANGE TO DOCUMENT**: change to been.	E	Text revised as suggested.	R
4.7.5.7.1		JB	**COMMENT:** ...inan **CHANGE TO DOCUMENT**: change to in an.	E	Text revised as suggested.	R
4.7.5.7.1		JB	**COMMENT:** ...identifier provide advice... **CHANGE TO DOCUMENT**: change to provides.	E	Text revised as suggested.	R

Paragraph reference	Comment Number	Comment Author	Description of comment and proposed resolution	Cat	Resolution History	Status
4.7.5.7.2		JB	**COMMENT:** The last example, taken from NAT ICD, didn't include the explanation from that document. **CHANGE TO DOCUMENT**: Add after example: *The CPDLC Connection with ICE615 has been terminated*	A	Text revised as suggested.	R
4.8.1.1.1		JB	**COMMENT:** ...from on ATSU to another. **CHANGE TO DOCUMENT**: ...from one ATSU to another.	E	Text revised as suggested.	R
4.8.1.3.1		JB	**COMMENT:** ...a identifier... **CHANGE TO DOCUMENT**: ...an identifier...	E	Text revised as suggested.	R
Table 4-4		JB	**COMMENT:** EMG message shows field 13 is used. **CHANGE TO DOCUMENT**: Incorrect according to the other documents...remove field 13 reference for this message.	C	Text revised as suggested.	R
Table 4-4		JB	**COMMENT:** NAT ICD shows the **NAT** message as a CORE message, PAN table does not. **CHANGE TO DOCUMENT**: Change table to show this as a CORE message if this is the case.	C	Text revised as suggested.	R
Table 4-4		JB	**COMMENT:** NAT ICD shows the **ASM** message as a CORE message, APAC and PAN ICD show optional. **CHANGE TO DOCUMENT**: Resolve this and reflect in Table 4-4.	C	Text added to reflect NAT CORE message and APAC optional message.	O
Table 4-4		JB	**COMMENT:** NAT ICD shows the **FAN** message as a CORE message, APAC and PAN ICD show optional. **CHANGE TO DOCUMENT**: Resolve this and reflect in Table 4-4.	C	Text added to reflect NAT CORE message and APAC optional message.	O
Table 4-4		JB	**COMMENT:** NAT ICD shows the **FCN** message as a CORE message, APAC and PAN ICD show optional. **CHANGE TO DOCUMENT**: Resolve this and reflect in Table 4-4.	C	Text added to reflect NAT CORE message and APAC optional message.	O
Table 5-1		JB	**COMMENT:** NAT ICD shows text for error code ~~10~~ 15 as INVALID CNA EQUIPMENT DESIGNATOR; APAC and PAN ICD show INVALID CNS EQUIPMENT DESIGNATOR. **CHANGE TO DOCUMENT**: Resolve this and reflect in Table 5-1.	C	Text added to reflect NAT and APAC inconsistency.	O

Paragraph reference	Comment Number	Comment Author	Description of comment and proposed resolution	Cat	Resolution History	Status
Table 5-1		JB	**COMMENT:** Text for error code 28: INVALID NAVID FIX **CHANGE TO DOCUMENT**: Change to NAVAID.	E	Text revised as suggested.	R
Table 5-1		JB	**COMMENT:** Text for error code 59: MESSAGE NOT APPLICABLE TO zzz OAC. **CHANGE TO DOCUMENT**: Should be zzzz OAC (4 letters).	E	Text revised as suggested.	R
Table 5-1		JB	**CHANGE TO DOCUMENT**: Error code 60: close parentheses at end of comment.	E	Text revised as suggested.	R
Table 5-1		JB	**COMMENT:** Field Number column for Error Codes 92-256 shows fields 14 and15. This did not come from the APAC ICD as indicated. **CHANGE TO DOCUMENT**: Remove?	C	Text revised as suggested.	R
7.13		JB	**COMMENT:** *Although outside the scope of the ICD, flight Planning messages play an important role within the region, and will continue to so in the future.* **CHANGE TO DOCUMENT**: If outside the scope, why carry it over from the APAC ICD? If it is included, insert *do* between *to* and *so*.	E	Text revised as suggested.	O
7.21.1.1		JB	**COMMENT:** *The IGM applies only to those portions of a flight operating within the APAC NAT/PAC Regions; Only flights totally within the NAT NAT/PAC oceanic FIRS are considered;* **CHANGE TO DOCUMENT**: Are both of these necessary?	E	NAT text deleted.	R
7.21.1.3		JB	**COMMENT:** *ot* **CHANGE TO DOCUMENT**: Should be *to*.	E	Text revised as suggested.	R
7.23.2.5		JB	**COMMENT:** *...one ATSU my initiate...* **CHANGE TO DOCUMENT**: *...one ATSU may initiate...*	E	Text revised as suggested.	R
7.24.4		JB	**COMMENT:** *... may not ve required...* **CHANGE TO DOCUMENT**... *may not be required...*	E	Text revised as suggested.	R

Paragraph reference	Comment Number	Comment Author	Description of comment and proposed resolution	Cat	Resolution History	Status
7.24.5		JB	**COMMENT:** ... *failure or the ground-ground link.* **CHANGE TO DOCUMENT**... *failure of the ground-ground link.*	E	Text revised as suggested.	R
7.24.7		JB	**CHANGE TO DOCUMENT**: close parentheses.	E	Text revised as suggested.	R
7.24.7.2		JB	**COMMENT:** *In the example below, the aircraft identification is **QFA924** rather that the QFA924 contained in Line 4 of the ACARS message.* **CHANGE TO DOCUMENT:** *that* becomes *than; QF924* becomes *QF0924*.	C, E	Text revised as suggested.	R
7.24.8		JB	**COMMENT**: ... *it is possible for the SMI or an aircraft...* **CHANGE TO DOCUMENT:** ...*it is possible for the SMI of an aircraft...*	E	Text revised as suggested.	R
7.24.11		JB	**COMMENT**: ... *by their receiving ATSU.* **CHANGE TO DOCUMENT:** ... *by the receiving ATSU.*	E	Text revised as suggested.	R
Table 7-2		JB	**COMMENT**: Column header---***When an FCN should not be sent*** **CHANGE TO DOCUMENT:** INCORRECT---should read--- ***When an FCN should be sent***	C	Text revised as suggested.	R
Figure 7-1		JB	**COMMENT**: Arrow in the graphic labeled **FCN (CPD=2)** is pointing the wrong way (according to NAT and APAC ICDs). **CHANGE TO DOCUMENT:** Reverse the arrow direction.	C	Graphic revised as suggested.	R
7.24.14.4		JB	**COMMENT**: ... *multiple CPDLC connection request...* **CHANGE TO DOCUMENT:** ... *multiple CPDLC connection requests...*	E	Text revised as suggested.	R
7.24.14.4		JB	**COMMENT**: ... *in the even that the...* **CHANGE TO DOCUMENT:** ... *in the event that the...*	E	Text revised as suggested.	R

Paragraph reference	Comment Number	Comment Author	Description of comment and proposed resolution	Cat	Resolution History	Status
Figure ~~7-1~~ 7-4		JB	**COMMENT**: Arrow in the graphic labeled **Disconnect Request + DM64** is pointing the wrong way (according to NAT and APAC ICDs). **CHANGE TO DOCUMENT:** Reverse the arrow direction.	C	Graphic revised as suggested.	R
7.33.3.1		JB	**COMMENT**: *(e.g. form either an...)* **CHANGE TO DOCUMENT:** *(e.g. from either an...)*	E	Text revised as suggested.	R
7.33.3.2		JB	**COMMENT**: *Pac signals to the R-ATSU...* **CHANGE TO DOCUMENT:** For consistency change Pac to PAC	E	Text revised as suggested.	R
7.33.4		JB	**COMMENT**: Re-Negotiating Dialogue **CHANGE TO DOCUMENT:** APAC ICD refers to this as a Re-Negotiation Dialogue	E	Text revised as suggested.	R
7.33.4.1		JB	**COMMENT**: *... with an ACP indication...* **CHANGE TO DOCUMENT:** *... with an ACP indicating...*	E	Text revised as suggested.	R
7.33.5.1		JB	**COMMENT**: *... only on DCN may be active...* **CHANGE TO DOCUMENT:** *... only one C DN may be active...*	E	Text revised as suggested.	R
7.33.5.1		JB	**COMMENT**: *Note, however that ...* **CHANGE TO DOCUMENT:** Insert comma after *however*	E	Text revised as suggested.	R
7.33.5.1		JB	**COMMENT**: *...thought each pair of ATSUs...* **CHANGE TO DOCUMENT:** *...though each pair of ATSUs...*	E	Text revised as suggested.	R
7.33.5.1		JB	**COMMENT**: *... cancelling the S-ATSU's CDN.* **CHANGE TO DOCUMENT:** *... cancelling the D-ATSU's CDN.*	C	Text revised as suggested.	R
7.33.6.4		JB	**COMMENT**: *... Latitude/longitude in the format dd[NS]ddd{EW] or ddmm[NS]ddmm[EW]* **CHANGE TO DOCUMENT:** *Latitude/longitude in the format dd[NS]ddd{EW] or ddmm[NS]dddmm[EW]*	C	Text revised as suggested.	R
7.33.8.1		JB	**COMMENT**: *... there is not operational response...* **CHANGE TO DOCUMENT:** *... there is no operational response...*	E	Text revised as suggested.	R

Paragraph reference	Comment Number	Comment Author	Description of comment and proposed resolution	Cat	Resolution History	Status
7.33.8.4		JB	**COMMENT**: *When using the DEC/[position] element...* **CHANGE TO DOCUMENT:** *When using the DCT/[position] element...*	C	Text revised as suggested.	R
7.33.10.1		JB	**COMMENT**: *...on all aircraft that ACI B...* **CHANGE TO DOCUMENT:** *...on all aircraft that enter ACI B...*	E	Text revised as suggested.	R
7.41.1		JB	**COMMENT**: *... transfer occurs either a system parameter time...* **CHANGE TO DOCUMENT:** *transfer occurs at either a system parameter time*	E	Text revised as suggested.	R
7.41.1		JB	**COMMENT**: *... places the flight in a Notifying state ATSU B's perspective.* **CHANGE TO DOCUMENT:** *: ... places the flight in a Notifying state from ATSU B's perspective.*	E	Text revised as suggested.	R
7.41.1		JB	**COMMENT**: *... for some reason, such a change in route is no longer...* **CHANGE TO DOCUMENT:** *... for some reason, such as a change in route, is no longer...*	E	Text revised as suggested.	R
7.42.1		JB	**COMMENT**: *... from the FIR A – FIR B FIR B's boundary.* **CHANGE TO DOCUMENT:** Delete *FIR B's*	E	Text revised as suggested.	R
7.43.2		JB	**COMMENT**: Repeats info already contained in 7.33.5.1 **CHANGE TO DOCUMENT:** Omit one of these sections	E	Para 7.43.2 deleted.	R
7.43.3		JB	**COMMENT**: Repeats info already contained in 7.33.9.1 **CHANGE TO DOCUMENT:** Omit one of these sections	E	Para 7.43.3 deleted.	R
7.43.4		JB	**COMMENT**: Repeats info already contained in 7.33.10.1 **CHANGE TO DOCUMENT:** Omit one of these sections	E	Para 7.43.4 deleted.	R
7.44.2		JB	**COMMENT**: Repeats info already contained in 7.34.2.1 **CHANGE TO DOCUMENT:** Omit one of these sections	E	Para 7.44.2 deleted.	R

Paragraph reference	Comment Number	Comment Author	Description of comment and proposed resolution	Cat	Resolution History	Status
Table 7-4		JB	**COMMENT**: Column 1 Row 7 *Notifying/Negotiating* **CHANGE TO DOCUMENT:** Incorrect reference, change to *Negotiating/Negotiating*	C	Text revised as suggested.	R
Table 7-4		JB	**COMMENT**: Column 1 Row 9 *Negotiating/Coordinated* **CHANGE TO DOCUMENT:** Incorrect reference, change to *Coordinating/Coordinated*	C	Text revised as suggested.	R
Table 7-4		JB	**COMMENT**: Column 3 Row 2 (second page) *A TOC is sent after coordination occurs bur (usually just) before the boundary is crossed to the accepting ATSU.* **CHANGE TO DOCUMENT:** *but* Also, the sentence is awkward and can easily be reworded.	E	Text revised as suggested.	R
Table 7-4		JB	**COMMENT**: Column 1 Row 6 (second page) *Backward-Coordinating/Backward-Coordination* The NAT ICD contains this also and I believe it's a typo since there are no references to the word "coordination" when describing flight states. **CHANGE TO DOCUMENT:** Incorrect reference, change to *Backward-Coordinating/Backward-Coordinating*	C	Text revised as suggested.	R
7.51		JB	**COMMENT**: *...transitions form on state to the next based on the receipt ?? AIDC messages...* **CHANGE TO DOCUMENT:** *... transitions from on state to the next based on the receipt of AIDC messages...*	E	Text revised as suggested.	R
7.61		JB	**COMMENT**: *(1) General Information messages; and (2) Surveillance Data Transfer Application Management messages.* **CHANGE TO DOCUMENT:** Drop *Application Management* ...this section doesn't discuss those messages.	E	Text revised as suggested.	R
7.62.2 7.62.2.1		JB	**COMMENT**: Track Definition message discussed in Chapter 4. **CHANGE TO DOCUMENT:** Drop	E	Paras 7.62.2 & 7.62.2.1 deleted.	R
7.72.2		JB	**COMMENT**: *...the boundary estimated...* **CHANGE TO DOCUMENT:** *...the boundary estimate...*	E	Text revised as suggested.	R

Paragraph reference	Comment Number	Comment Author	Description of comment and proposed resolution	Cat	Resolution History	Status
7.72.3		JB	**COMMENT**: **CHANGE TO DOCUMENT:** Add a second sentence from the APAC ICD: *Auckland accepts ATC responsibility by responding with an AOC.*	A	Text added as suggested.	R
7.74.5		JB	**COMMENT**: Table in the example repeated the last three rows. **CHANGE TO DOCUMENT:** Delete the last three rows.	E	Rows deleted as suggested.	R
7.76.4		JB	**COMMENT**: *Due tow weather* **CHANGE TO DOCUMENT:** *Due to weather*	E	Text revised as suggested.	R
7.80.3		JB	**COMMENT**: *...by responding with an ACP*. **CHANGE TO DOCUMENT:** ...should this be *…by responding with an AOC*.	C	Text revised as suggested.	R
7.82.1		JB	**COMMENT**: **CHANGE TO DOCUMENT:** As in previous instances, change NAT references to NAT/APAC.	E	Text revised as suggested.	R
8.21.3.1		JB	**COMMENT**: Misspelling---*affected* **CHANGE TO DOCUMENT:** *effected*	E	Text revised as suggested.	R
8.21.3.2		JB	**COMMENT**: Missing text from NAT ICD... *will take place 60 minutes (adaptable) before 61 N or not.* **CHANGE TO DOCUMENT:** *... will take place 60 minutes (adaptable) before 61 N whether the flight has a route point coincident with 61 N or not.*	A	Text added as suggested.	R
8.21.4.1		JB	**COMMENT**: Misspelling---*proceeding* **CHANGE TO DOCUMENT:** *preceding*	E	Text revised as suggested.	R
8.21.7		JB	**COMMENT**: *System of line failures* **CHANGE TO DOCUMENT:** *System or line failures*	E	Text revised as suggested.	R
8.22.1.1		JB	**COMMENT**: Misspelling---*affected* **CHANGE TO DOCUMENT:** *effected*	E	Text revised as suggested.	R

Paragraph reference	Comment Number	Comment Author	Description of comment and proposed resolution	Cat	Resolution History	Status
8.22.1.1		JB	**COMMENT**: Misspelling---*later* **CHANGE TO DOCUMENT:** *latter*	E	Text revised as suggested.	R
8.22.2.6		JB	**COMMENT**: *...designated by two numeric ...* **CHANGE TO DOCUMENT:** *designated by two numerics...*	E	Text revised as suggested.	R
8.22.3.1		JB	**COMMENT**: Misspelling---*affected* **CHANGE TO DOCUMENT:** *effected*	E	Text revised as suggested.	R
8.25.1		JB	**COMMENT**: *appropriated* **CHANGE TO DOCUMENT:** *appropriate*	E	Text revised as suggested.	R
8.25.2		JB	**COMMENT**: *...in accordance with Parts I, and II of the ICD...* **CHANGE TO DOCUMENT:** **...***in accordance with the PAN ICD...*	E	Text revised to *Chapters 2 and 4 of the PAN ICD.*	R
9.11.5		JB	**COMMENT**: *...in the NAT/APAC AIDC Interface Control Document (ICD) (ICAO PANS-ATM Doc 4444).* **CHANGE TO DOCUMENT:** *...in the NAT/APAC AIDC Interface Control Document (ICD) (and ICAO PANS-ATM Doc 4444).*	E	Text revised as suggested.	R
Table ~~9-2~~ 9-1		JB	**COMMENT**: In the Optional Data Field Usage column *Other information* is labeled *Always used*. **CHANGE TO DOCUMENT:** Change label for *Other information* to *Optional*. (2 places)	C	Text revised as suggested.	R
Table ~~9-2~~ 9-1		JB	**COMMENT**: Omitted data from APAC ICD. **CHANGE TO DOCUMENT:** For the CPL message, under PAN Mandatory Data Fields, add *Flight Rules* and *Equipment*.	A	Text added as suggested.	R
11.21		JB	**COMMENT**: *...used by ATS Providers in interface with...* **CHANGE TO DOCUMENT:** *...used by ATS Providers to interface with...*	E	Text revised as suggested.	R

Paragraph reference	Comment Number	Comment Author	Description of comment and proposed resolution	Cat	Resolution History	Status
11.22.1.2 11.23.1.2 11.23.2.2		JB	**COMMENT**: Column heading reads: *ATS Format* **CHANGE TO DOCUMENT:** Should be *ATS Field*	E	Text revised as suggested.	R
11.23.3.2 Table		JB	**COMMENT**: ... *numeric* ... (used in 9 places) **CHANGE TO DOCUMENT:** Change to *numerics*...	E	Text revised as suggested.	R
11.23.3.2 Table		JB	**COMMENT**: ...*alphanumeric* ... (in description of field 13 and later---used four times; the first use, for field 7, is correct). **CHANGE TO DOCUMENT:** Change to *alphabetic*...	C	Text revised as suggested.	R
11.23.3.2 Table		JB	**COMMENT**: ...*range 00 to 59 then followed by*... **CHANGE TO DOCUMENT:** Add the letter "F"...*range 00 to 59 then F followed by*...	E	Text revised as suggested.	R
11.23.3.2 Table		JB	**COMMENT**: ...*per I ICAO Doc 8543*... **CHANGE TO DOCUMENT:** Drop the extra letter "I", change document reference to: ... *per ICAO Doc 8643*...	E, C	Text revised as suggested.	R
11.23.3.2 Table		JB	**COMMENT**: ...*followed directly by on of the*... **CHANGE TO DOCUMENT:** ...*followed directly by one of the*...	E	Text revised as suggested.	R
11.23.4.2 Table		JB	**COMMENT**: ... *numeric* ... (used in 11 places) **CHANGE TO DOCUMENT:** Change to *numerics*...	E	Text revised as suggested.	R
11.23.4.2 Table		JB	**COMMENT**: ...*alphanumeric* ... (in description of field 13). **CHANGE TO DOCUMENT:** Change to *alphabetic*...	C	Text revised as suggested.	R
Appendix A Page A-1		JB	**COMMENT**: Last sentence... *the resulting MOW*... **CHANGE TO DOCUMENT:** ... *the resulting MOU*...	E	Text revised as suggested.	R
Appendix A Page A-5		JB	**COMMENT**: **CHANGE TO DOCUMENT:** Add **Letter of Agreement,** the header from the APAC ICD, under ***Example*: Auckland Oceanic – Brisbane ATS Centre**	A	Text added as suggested.	R
Appendix A Page A-12		JB	**COMMENT**: Missing information under Parameter, row 3. **CHANGE TO DOCUMENT:** Under AOC change to	A	Text added as suggested.	R

Paragraph reference	Comment Number	Comment Author	Description of comment and proposed resolution	Cat	Resolution History	Status
			Nadi: Sent by the controller on acceptance of TOC.			
Appendix A Page A-14		JB	**COMMENT**: Missing information---*Notification of Descent Restrictions by* **CHANGE TO DOCUMENT:** Add *Notification of Descent Restrictions by Nadi*	A	Text added as suggested.	R
2.1		LSM	**COMMENT: Need to spell out APAC and NAT at the beginning** **SUGGESTED CHANGE TO DOCUMENT: … within the Asia/Pacific (APAC) and North Atlantic (NAT) …**	E	Text revised as suggested.	R
Chapter 1, ACRONYMS		LSM	**COMMENT: typo on CRC** **SUGGESTED CHANGE TO DOCUMENT: Change "Ceck" to "Check"**	E	Text revised as suggested.	R
2.34.3.1.2		LSM	**COMMENT: "The in a block of levels between F350 and F370 (inclusive) maintaining M0.85 or greater. aircraft is operating"** **SUGGESTED CHANGE TO DOCUMENT: "The aircraft is operating in a block of levels between F350 and F370 (inclusive) maintaining M0.85 or greater."**	E	Text revised as suggested.	R
2.44.2		LSM	**COMMENT: extra space between the words "directly" and "after"** **SUGGESTED CHANGE TO DOCUMENT: " … will appear directly after …**	E	Text revised as suggested.	R
4.31.3		LSM	**COMMENT: "a" should be "an"** **SUGGESTED CHANGE TO DOCUMENT: " … The field consists of an identifier …**	E	Text revised as suggested.	R

Paragraph reference	Comment Number	Comment Author	Description of comment and proposed resolution	Cat	Resolution History	Status
4.4.3.2 ATS Field 14		LSM	**COMMENT: Misspelling** **SUGGESTED CHANGE TO DOCUMENT: "bondary" should be "boundary"**	E	Text revised as suggested.	R
4.4.8.9.1		LSM	**COMMENT: Misspelling "®"** **SUGGESTED CHANGE TO DOCUMENT: should be "(R)"**	E	Text revised as suggested.	R
4.4.8.9.1		LSM	**COMMENT: extra space between the words "of" and "track"** **SUGGESTED CHANGE TO DOCUMENT: " … (either side of track) …"**	E	Text revised as suggested.	R
4.6.3.2. 6 a		LSM	**COMMENT: correction to abbreviation "eg"** **SUGGESTED CHANGE TO DOCUMENT: should be "e.g."**	E	Text revised as suggested.	R
4.6.4.3.6 18		LSM	**COMMENT: grammar error** **SUGGESTED CHANGE TO DOCUMENT: " … There are no recommended North American airways."**	E	Text revised as suggested.	R
4.7.5.7.1		LSM	**COMMENT: typo** **SUGGESTED CHANGE TO DOCUMENT: " … may be included in an …"**	E	Text revised as suggested.	R
7.21.1.3		LSM	**COMMENT: typo** **SUGGESTED CHANGE TO DOCUMENT: " ,,, possible to revert to manual … "**	E	Text revised as suggested.	R
7.24.4		LSM	**COMMENT: typo** **SUGGESTED CHANGE TO DOCUMENT: " …**	E	Text revised as suggested.	R

Paragraph reference	Comment Number	Comment Author	Description of comment and proposed resolution	Cat	Resolution History	Status
			While the second FAN may not be required…"			
Table 7.2 3rd entry under heading		LSM	**COMMENT: capitalization** **SUGGESTED CHANGE TO DOCUMENT: "icao" should be "ICAO"**	E	Text revised as suggested.	R
7.33.6.5.1		LSM	**COMMENT: typo** **SUGGESTED CHANGE TO DOCUMENT: "ATSus" should be "ATSUs"**	E	Text revised as suggested.	R
7.44.1		LSM	**COMMENT: spelling error** **SUGGESTED CHANGE TO DOCUMENT: "signalling" should be "signaling"**	E	Text revised as suggested.	R
Table 7-5 Column 2 header		LSM	**COMMENT: spelling error** **SUGGESTED CHANGE TO DOCUMENT: "Messge" should be "Message"**	E	Text revised as suggested.	R
7.73.5 Example header		LSM	**COMMENT: spelling error** **SUGGESTED CHANGE TO DOCUMENT: "Brtisbane" should be "Brisbane"**	E	Text revised as suggested.	R
8.22.2.6		LSM	**COMMENT: grammar error** **SUGGESTED CHANGE TO DOCUMENT: " … two numeric … " should " … two numerics"**	E	Text revised as suggested.	R
Pg 96 thru 98, right-most column header		LSM	**COMMENT: spelling error** **SUGGESTED CHANGE TO DOCUMENT: "Useage" should be "Usage"**	E	Text revised as suggested.	R
11.21		LSM	**COMMENT: spelling error** **SUGGESTED CHANGE TO DOCUMENT: "Preswick" should be "Prestwick"**	E	Text revised as suggested.	R

Paragraph reference	Comment Number	Comment Author	Description of comment and proposed resolution	Cat	Resolution History	Status
Pg A-2, Template 1, 4.b.		LSM	**COMMENT: typo** **SUGGESTED CHANGE TO DOCUMENT: " … MAC message much not …" should be " … MAC message must not …"**	E	Text revised as suggested.	R
Pg A-3, ABI, right column		LSM	**COMMENT: typo** **SUGGESTED CHANGE TO DOCUMENT: " … Updated aBI's" should be " … Updated ABI's"**	E	Text revised as suggested.	R
Pg A-6, ACP – OCE		LSM	**COMMENT: grammar error** **SUGGESTED CHANGE TO DOCUMENT: " … OCS: If ACP is not receive…" should be " … OCS: If ACP is not received"**	E	Text revised as suggested.	R
A-11, Procedures		LSM	**COMMENT: grammar error** **SUGGESTED CHANGE TO DOCUMENT: "messages (ABI, EST, PAC, CDN, CPL, ACP, REJ, TOC, AOC, MAC, LAM and LRM) are defined…" should be "messages (ABI, EST, PAC, CDN, CPL, ACP, REJ, TOC, AOC, MAC, LAM and LRM) is defined…"**	E	Text revised as suggested.	R
A-14, Notification of Descent Restrictions		LSM	**COMMENT: alignment** **SUGGESTED CHANGE TO DOCUMENT: Needs to be corrected on the page**	E	Formatting revised as suggested.	R
Various		Radford	**COMMENT: All regional specific information should be moved from main body of document into regional appendices.** **SUGGESTED CHANGE TO DOCUMENT:**			O
Document Name		Radford	**COMMENT: This is not just an Oceanic document. In Asia/Pac messages are used across the region. Initially task is just to combine existing ASIA/PAC and NAT ICD. When this is complete, next step is to include new**			O

Paragraph reference	Comment Number	Comment Author	Description of comment and proposed resolution	Cat	Resolution History	Status
			material. This new material will need to include messages in use in other regions if we are serious about moving towards a true Pan Regional (global) ICD. If this is too difficult then suggest we call the initial offering what it is i.e Asia/Pacific and NAT Regional ICD. **SUGGESTED CHANGE TO DOCUMENT:**			
New material		Radford	**COMMENT: An AIDC implementation seminar held in Asia/Pac Regional Office Bangkok 12-13 October 2010 was briefed on initial steps being taken towards a Pans Regional ICD. This meeting was attended by a number of states that were either in process of implementing or had just implemented AIDC. Meeting suggested following points for consideration by the PAN ICD editorial team when assessing new material that could be included in a "new" document: 1. CRC. There are a number of "flavours" of CRC algorithm in use. Need more detailed guidance and bilateral agreement as to which is employed. 2. Performance requirements and post implementation monitoring guidance. 3. Guidance on field sizes for software developers – many different interpretations in field affecting efficiency in Asia/Pac example given included different item 10 size limitations between systems.4. Guidance on handling regional differences in Field 18. RVR, DOF are past examples. AOC filing item19 data in item 18 was another. 5. Guidance on parsing rules for developers. 6. Training requirements. 7. Infrastructure required before AIDC can be implemented 8. Contingency planning. 9. Interface testing guidance 9. Examples of actual implementations between ATC units e.g messages used, timing, use etc 10. Quantifying data on safety improvement, workload reduction etc. 11. HMI guidance.** **SUGGESTED CHANGE TO DOCUMENT:**			O

Paragraph reference	Comment Number	Comment Author	Description of comment and proposed resolution	Cat	Resolution History	Status
2.3		AW	**COMMENT:** **Formatting – several sub-headings within 2.3 possibly should be "bolded" (e.g. 2.32.1, 2.32.2, 2.32.3 etc)** **SUGGESTED CHANGE TO DOCUMENT:**		Text not revised to maintain consistency with other sub-headings in document.	R
2.31		AW	**COMMENT:** **SUGGESTED CHANGE TO DOCUMENT:** **Suggest adding the following text:** **Bilateral agreements should determine the units to be transmitted in AIDC messages.**		Text added as suggested.	R
2.32		AW	**COMMENT:** **The exceptions included here also apply to the Track Data field in a TRU message. Refer ICD V3 p4.4.1** **SUGGESTED CHANGE TO DOCUMENT:**		No action taken	R
2.32.2		AW	**COMMENT:** **The original heading in the AP ICD was "Mach Number Technique Information", which has been changed to "Speed and Mach Number Technique Information".** **Was the purpose of this to include a speed that is not a mach number (i.e. knots), or to cater for a scenario where a mach Number has been applied, but it is not necessarily in accordance with the Mach Number Technique procedure?** **If the former, suggest including an example, otherwise**		Para 2.34 is "Level and speed information" APAC Part 1, para 4.4 Para 2.34.3 is "Mach number technique information" APAC Part 1, para 4.4.1.2	R

Paragraph reference	Comment Number	Comment Author	Description of comment and proposed resolution	Cat	Resolution History	Status
			suggest changing the heading to "Mach Number information" **SUGGESTED CHANGE TO DOCUMENT:**			
2.32.2.1 (Example 1)		AW	**COMMENT:** **This text has been transposed from the original. Update as follows:** **SUGGESTED CHANGE TO DOCUMENT:** **The aircraft is operating in a block of levels between F350 and F370 (inclusive) maintaining M0.85 or greater. aircraft is operating**		Text revised as suggested.	R
2.32.3		AW	**COMMENT:** **Suggest including minimum and maximum values as well as the specific format for weather deviations/offsets (refer AP ICD V3 for details). This could be either in these paragraphs, or in a Table elsewhere in the document that includes all the formats as well as min/max values.** **In addition the order of the additional data (e.g. when an AIDC message contains both a Mach Number and a Weather deviation) has been omitted. While there are examples showing it, these examples do not mandate the format – suggest it is included in these paragraphs.** **SUGGESTED CHANGE TO DOCUMENT:**			O
2.32.3.3		AW	**COMMENT:** **The offset format may also be used in the Track Data field in a TRU message. Refer ICD V3**			O

Paragraph reference	Comment Number	Comment Author	Description of comment and proposed resolution	Cat	Resolution History	Status
			SUGGESTED CHANGE TO DOCUMENT:			
2.32.3.5		AW	**COMMENT:** **The text in this paragraph specifically refers to when "coordinating" an offset. The restriction also applies to other AIDC messages such as ABI (notification message) and TRU message** **Suggest more generic wording, as suggested below:** **SUGGESTED CHANGE TO DOCUMENT:** **"When transmitting an AIDC message containing Offset information, the direction "E" (either side of track) shall not be used"**		Text revised as suggested.	R
2.51		AW	**COMMENT:** **This requirement was not contained in the ICD V3. If there is no waypoint within a time parameter of the FIR boundary, Our system (ad others) uses a system calculated boundary position.** **Need to make this more generic** **SUGGESTED CHANGE TO DOCUMENT:**			O
~~2.41.2~~ 2.42.2		AW	**COMMENT:** **Suggest adding "of the aircraft""** **SUGGESTED CHANGE TO DOCUMENT:** **"Route, speed and level information contained in the Route field (ICAO ATS Field 15) represents the current cleared profile of the aircraft"**		Text revised as suggested.	R

Paragraph reference	Comment Number	Comment Author	Description of comment and proposed resolution	Cat	Resolution History	Status
2.42.6 (& elsewhere)		AW	**COMMENT:** **Standardise the use of terms such as ATSU, ATSP etc throughout the document (the same problems were encountered with the development of GOLD)** **SUGGESTED CHANGE TO DOCUMENT:**			O
~~2.43.1~~ 4.12.1		AW	**COMMENT:** **The highlighted text below may not always be feasible?!? This text does not appear in either the AP or NAT ICDs.** **Field 15 shall include subfields 15a, 15b and 15c. It shall describe the cleared route, beginning with the last route point preceding the coordination point. It will contain the full cleared route of flight to destination as filed by the aircraft in its FPL or CHG. In order to avoid route discontinuity, if a change in filed route has been given by ATC, a clearance to rejoin its filed route shall be given. If the cleared route of flight is not known completely to destination, the truncation indicator shall appear after the last known cleared route point.** **I would also like discussion regarding the content of the 'cleared route'. We send the entire route (not quite in compliance with the specs!), but sometimes the 'last route point preceding the coordination point' is insufficient.** **For example, if you are sending an ABI 50 minutes form the FIR boundary, the route information sent should contain at least 50 minutes of route information prior to the coordination point.** **Also suggest including examples on the use of**		This text is referenced from APAC ICD, Appendix A, para 1.2.1	O

Paragraph reference	Comment Number	Comment Author	Description of comment and proposed resolution	Cat	Resolution History	Status
			truncation (there are some in ICD V3). **SUGGESTED CHANGE TO DOCUMENT:**			
~~2.43.1~~ 4.12.1		AW	**COMMENT:** **A number of problems concerning truncation were encountered in SOPAC. The ICD V3 contains several clarification Notes concerning truncation – these notes are included below:** **Note 1: In accordance with PANS-ATM Doc 4444 the truncation indicator shall only follow a significant point or significant point/Cruising Speed and Cruising level in Field 15 and shall not follow an ATS route designator.** **Note 2. ATSUs should be aware of the risks associated with simply deleting an unknown waypoint or route without using correct truncation procedures. Deletion of a waypoint or route will result in erroneous route information being transmitted to downstream ATSUs.** **Suggest that the intent of these notes is included in this document.** **See also later comment for 4.12** **SUGGESTED CHANGE TO DOCUMENT:**		Notes included in para.	R
~~2.44.2~~ 4.13.2		AW	**COMMENT:** **This paragraph refers to para 3.22.5. para 3.21.5 is probably a better reference.** **SUGGESTED CHANGE TO DOCUMENT:**		Reference is 3.21.5	R

Paragraph reference	Comment Number	Comment Author	Description of comment and proposed resolution	Cat	Resolution History	Status
2.51		AW	**COMMENT:** **This appears to be new text (not in NAT or AP ICD). Needs discussion.** **We use any waypoint within a time parameter of the FIR boundary otherwise a system calculated lat/long is used. Other systems may use the closest waypoint to the boundary (other than the one before).** **We probably need words to ensure that systems support the receipt of any of these options, even if they only support the transmission of one of them (this ensures interoperability). Then add words to the effect that bilateral agreements define the method used.** **SUGGESTED CHANGE TO DOCUMENT:**		This text is from NAT ICD, Part I, para 6.1	O
2.5 & 2.51		AW	**COMMENT:** **I feel that these paragraphs should follow on from 2.43.1 (i.e. move 2.51 up above 2.44)** **SUGGESTED CHANGE TO DOCUMENT:**			O
3.14		AW	**COMMENT:** **What is meant by an "application message"?** **SUGGESTED CHANGE TO DOCUMENT:**		Para 4.7.4.1.1 describes the FANS application message as: *"Transmitted by an ATSU (generally the controlling ATSU) to another ATSU (generally the receiving ATSU) to provide the required information necessary to establish CPDLC and/or ADS-C connections with FANS equipped aircraft and thus reduce the number of air-ground messages required to affect the transfer."* This is referenced from APAC ICD, APPENDIX A, PARA 2.5.4.1 – NAT ICD, PART II, PARA 2.5, PG 25	R

Paragraph reference	Comment Number	Comment Author	Description of comment and proposed resolution	Cat	Resolution History	Status
3.14		AW	**COMMENT:** **The FAN message may actually include a hyphen, so this sentence needs to be re-worded.** **SUGGESTED CHANGE TO DOCUMENT:** **Unless otherwise described herein (e.g. for FAN message), a A single hyphen "-" shall be used only as a field separator and shall not be used within any field.**		There is no para 3.14 in the document, so unable to effect the suggested change	O
3.21.1		AW	**COMMENT:** **Can anyone clarify the term "AFTN IA-5 Message header"? (is there such a thing?) or should it just be an "AFTN message header"?** **SUGGESTED CHANGE TO DOCUMENT:**		ICAO Annex 10, Vol II, para 4.4.15 Message format — International Alphabet No. 5 (IA-5): *When it has been agreed between the Administrations concerned to use International Alphabet No. 5 (IA-5) the format described in 4.4.15 through 4.4.15.3 shall be used.* An illustration of the IA-5 message format is at Attachment A to this form.	O
3.21.2		AW	**COMMENT:** **Re-arrange words:** **SUGGESTED CHANGE TO DOCUMENT:** **"Optional data field. Provides The optional data field provides a flexible way to convey information from end-to-end"**		Text revised as suggested.	R
3.21.2		AW	**COMMENT:** **Amend tense as follows below** **SUGGESTED CHANGE TO DOCUMENT:** **The proposed encoding has would have no impact on AFTN switching centers as they ignore this part of the origin line**		Text revised as suggested.	R

Paragraph reference	Comment Number	Comment Author	Description of comment and proposed resolution	Cat	Resolution History	Status
~~3.21.4.2~~ 3.21.4.3		AW	**COMMENT:** **The reference to para 2.12 should probably be para 3.22.3** **SUGGESTED CHANGE TO DOCUMENT:**		The reference was changed to para 3.21.7 in accordance with APAC ICD & NAT ICD	R
~~3.21.4.2~~ 3.21.4.3 last sentence		AW	**COMMENT:** **Re: "For messages/data not requiring confirmation the message/data identification parameter shall not be used"** **Many ATSUs do actually currently include the message identification in messages such as a LAM. Suggest that this requirement is toned down a little!** **SUGGESTED CHANGE TO DOCUMENT:**		Text is in accordance with APAC ICD, PART II, PARA 2.1.3.2 – NAT ICD, PART III, PARA 2.1.4 b)	O
3.21.5-6		AW	**COMMENT:** **Suggest referring the reader to para 3.22.5 for examples** **SUGGESTED CHANGE TO DOCUMENT:**		Reference to para 3.22.5 added.	R
3.21.7		AW	**COMMENT:** **Problems have been encountered with CRC checks, due to there being a number of variations of the CRC-CCITT algorithm.** **Suggest additional text describing this. Do we mandate one specific version, or suggest that implementers support all of them (off line define which one to use for each adjoining ATS Unit?)** **Refer http://www.bangkok.icao.int/meetings/2010/sip/ip10.pdf**			O

Paragraph reference	Comment Number	Comment Author	Description of comment and proposed resolution	Cat	Resolution History	Status
			SUGGESTED CHANGE TO DOCUMENT:			
3.22.5		AW	**COMMENT:** **The use of the word "Core" is probably unnecessary. Suggest using the more generic "AIDC"** **SUGGESTED CHANGE TO DOCUMENT:** **The following examples depict two Core AIDC Messages encoded in accordance with the previous procedures.**		Text revised as suggested.	R
3.33.2		AW	**COMMENT:** **This paragraph refers to "performance figures" in Ch 7 (I couldn't initially find them! – maybe add a para reference 7.23.1?)?** **SUGGESTED CHANGE TO DOCUMENT:**		Text revised as suggested.	R
3.34.1 – 3.34.2		AW	**COMMENT:** **Where did this requirement come from (not in NAT or AP ICD?). Needs discussion. Also 3.34.1 contains reference to "flight planning messages" – this should probably refer to notification & coordination messages.** **Para 3.34.2 contains reference to RTI, RTA & RTU messages which are not contained in the ICD.** **SUGGESTED CHANGE TO DOCUMENT:**		This text is in accordance with APAC ICD, PART II, PARA 3.4, PARA 3.4.1, PARA 3.4.2	O
3-36		AW	**COMMENT:** **Suggest that this section be moved to an appendix?** **Also:** **Table contains reference to MOD, RTI, RTU, RTA and LRA messages which are not defined in this document.**		Unable to determine which section and/or table is being referenced in this comment. Co-ordinator believes this is in reference to Table 1. *Expected Message Rates and Sizes*, from v0.1 of PAN ICD. This table was deleted in v0.2 (See Attachment B	R

Paragraph reference	Comment Number	Comment Author	Description of comment and proposed resolution	Cat	Resolution History	Status
			Table does not contain a number of other AIDC messages, which should be considered for inclusion. **SUGGESTED CHANGE TO DOCUMENT:**		to this form)	
3.36.2 Note		AW	**COMMENT:** **Any chance of updated data? (i.e. rather than 1998)** **SUGGESTED CHANGE TO DOCUMENT:**		See Attachment B to this form. Table deleted.	R
3.38, 3.39		AW	**COMMENT:** **These paragraphs were not in the original ICDs. Probably need discussion.** **3.39 b) refers to a sequence number of "000". This is the first reference to "sequence numbers" in this document – should it actually refer to "identification number" (in which case it should be "000000", rather than "000".** **3.39 c) specifically refers to re-transmission of a CPL – this should probably be made more generic.** **SUGGESTED CHANGE TO DOCUMENT:**		Co-ordinator believes this is in reference to v0.1: **FAILURE AND RECOVERY SOLUTIONS** Automation systems may have different failure avoidance and failure recovery mechanisms. Each participating system shall have the following characteristics: a. If the recovery process preserves the current message number in the sequence with each facility, no notification is necessary. b. If the recovery process requires reset of the sequence number to 000, a means of notifying the receiving facility that the message numbers have been reset is required. This may be procedural rather than automated. c. The recovery process shall not automatically re-send any CPL for which an LAM had been received. This is relevant if the system was able to recover state information about which flight plans have been coordinated, and did not need to reset the message sequence numbers. This was deleted from v0.2	R
3.41.2.1		AW	**COMMENT:** **It is not possibly to meet this requirement - only responses to AIDC messages (e.g. LAM, LRM, ACP etc) contain Field 3 information.**		No para 3.41.2.1 Unclear what comment is referring to.	O

Paragraph reference	Comment Number	Comment Author	Description of comment and proposed resolution	Cat	Resolution History	Status
			SUGGESTED CHANGE TO DOCUMENT:			
4.11		AW	**COMMENT:** **Given that references in the introduction to OLDI that were contained in the NAT & AP ICDs have been removed from this document, suggest removing this last reference to OLDI** **SUGGESTED CHANGE TO DOCUMENT:**		Paras 2.13 and 2.13.1 define OLDI as referenced from NAT ICD, PART I, PARA 1.2	R
4.12		AW	**COMMENT:** **Much of this is duplicated from 2.43.1** **SUGGESTED CHANGE TO DOCUMENT:**		No duplication. Para 4.12 describes coordination and the further route of flight. Para 2.43.1 describes time restrictions at a fix.	
4.13		AW	**COMMENT:** **This is effectively a duplicate of 2.44.1-2.44.2** **SUGGESTED CHANGE TO DOCUMENT:**		No duplication. Para 4.13 describes field 3 requirements. Paras 2.44.1-2.44.2 describe time restrictions related to level/speed changes	R
4.14.1		AW	**COMMENT:** **Suggested reword as follows:** **SUGGESTED CHANGE TO DOCUMENT:** **Where Field 7 is mandatory required to be present in a message, Field 7a (Aircraft Identification) shall always be included be mandatory. Fields 7b (SSR Mode) and 7c (SSR Code) are optional but should shall always be included present where if the information is available. and applicable.**		Text revised as suggested.	R
Table 4-1		AW	**COMMENT:** **The definition of CDN varies between "Coordination" and "Coordination Negotiation" – needs to be**			O

Paragraph reference	Comment Number	Comment Author	Description of comment and proposed resolution	Cat	Resolution History	Status
			standardized) (I suggest the latter option) **The definition of NAT varies between "Organized Tracks" and "Organized Track Structure" – needs to be standardized)** **Add a check mark in column 2 against the NAT message** **Delete the duplicated TRU message (2nd last row)** **Replace "(Surveillance ADS)" with "(Surveillance ADS-C)"** **SUGGESTED CHANGE TO DOCUMENT:**		Text revised as suggested. Text deleted as suggested. Text revised as suggested.	
4.31.3, first sentence		AW	**COMMENT:** **Typo.** **SUGGESTED CHANGE TO DOCUMENT:** **"…message to notify an amended destination aerodrome…"**		Text revised as suggested.	R
4.31.3 Example 1		AW	**COMMENT:** **Typo.** **Also the longitude should probably be "W" (compare with the route data). Interestingly, this example came from our ICD V1.0, dated 1995!** **SUGGESTED CHANGE TO DOCUMENT:** **"...ABI-THA179-EGLL-15N090E15N0090E/0700F330..."**		Text revised as suggested.	R
4.31.3 Example 2		AW	**COMMENT:** **Typo (missing <space>)**		Text revised as suggested.	R

Paragraph reference	Comment Number	Comment Author	Description of comment and proposed resolution	Cat	Resolution History	Status
			SUGGESTED CHANGE TO DOCUMENT: **"…-10/SIDHJRW/CD-15/SYL521 15/SY L521 ESKEL**			
4.4.1.1.1		AW	**COMMENT:** **Minor reword:** **SUGGESTED CHANGE TO DOCUMENT:** **"Used to initiate the initial coordination dialogue between automated ATS systems for a specific flight"**		Text revised as suggested.	R
4.4.1.2		AW	**COMMENT:** **Suggest adding wake turbulence category and no. of aircraft" to Field 9. (i.e. to standardize the description of Field 9 in the ABI, CPL and PAC messages.** **Also, in the example, it appears that a ,tab. Has been used instead of <space> between the lat/longs in Field 15.** **SUGGESTED CHANGE TO DOCUMENT:** **"9 Number, Aircraft type and wake turbulence category"**		Text revised as suggested.	R
4.4.3.2		AW	**COMMENT:** **Standardise the display of Field 22 – in some messages it is shown as "22*", in others just as "22"** **SUGGESTED CHANGE TO DOCUMENT:**		Text standardized as suggested. "22"	R
4.4.4.1.1		AW	**COMMENT:** **Typo – add "to"** **Also suggest adding examples to the description of the**		Text revised as suggested. Example added as suggested.	R

Paragraph reference	Comment Number	Comment Author	Description of comment and proposed resolution	Cat	Resolution History	Status
			MAC **SUGGESTED CHANGE TO DOCUMENT:** **"Used to indicate to a receiving centre"**			
4.4.5.1.1		AW	**COMMENT:** **Typo** **Also suggest the paragraph by split into two paragraphs for ease of reading** **SUGGESTED CHANGE TO DOCUMENT:** **"ATSUs should ensure that appropriate procedures are defined in n bilateral Letters of Agreement"**		Text revised as suggested. Paragraph revised as suggested.	R
4.4.5.3, Example (c)		AW	**COMMENT:** **Not quite sure what this example actually means? There are also some additional examples in ICD V3 which may be useful.** **SUGGESTED CHANGE TO DOCUMENT:**		Examples are referenced from APAC ICD, APPENDIX A, PARA 2.2.5.4	R
4.4.6.1.1		AW	**COMMENT:** **Suggested minor reword** **SUGGESTED CHANGE TO DOCUMENT:** **"Used to confirm that the conditions contained in contents of a received CPL…"**		Text revised as suggested.	R
4.4.7.1.1		AW	**COMMENT:** **Suggested minor reword** **SUGGESTED CHANGE TO DOCUMENT:**		Text revised as suggested.	R

Paragraph reference	Comment Number	Comment Author	Description of comment and proposed resolution	Cat	Resolution History	Status
			"The coordination clearance remains as was previously agreed."			
4.4.8.1.1		AW	**COMMENT:** **Suggested minor reword** **SUGGESTED CHANGE TO DOCUMENT:** **"Used to coordinate permit the coordination of amendments…"**		Text revised as suggested.	R
4.4.8.5.1		AW	**COMMENT:** **Incorrect paragraph has been inserted. Replace as follows:** **SUGGESTED CHANGE TO DOCUMENT:** **This optional element is preceded by the identifier 'CFL' and contains the amended level that the aircraft has been assigned. Block levels in accordance with Part I, Paragraph 4.2 are also supported.** **This optional element is preceded by the identifier 'HDG' and contains the magnetic heading that has been assigned to the aircraft, expressed as a three digit number between 001 and 360.**		Text revised as suggested.	R
4.4.8.6.1		AW	**COMMENT:** **Reference needs to be updated.** **Suggest including an additional example as shown below** **SUGGESTED CHANGE TO DOCUMENT:**		Reference updated to para 2.34.2 Third example added as suggested.	R

Paragraph reference	Comment Number	Comment Author	Description of comment and proposed resolution	Cat	Resolution History	Status
			"…Block levels in accordance with para 2.32.1 Part I, Paragraph 4.2 are also supported" **"Example** **CFL/F330** **CFL/F310F330** **CFL/F310F330F210A"**			
4.4.8.9.1		AW	**COMMENT:** **Reference needs to be updated.** **Suggest bulleting the described format for the off track deviation** **Few typos.** **An important word "not" has been omitted** **SUGGESTED CHANGE TO DOCUMENT:** **"…The format of the off track deviation is as described in para 2.32.3 Part I paragraph 4.4.1 (a,b,c)"** **"…a direction, indicating left (L) or right (R) ® or, in the case of weather deviation, either side of track (E); and** **when including Offset information in an and AIDC message, the direction "E" (either side of track) shall not be used**		Text revised as suggested.	R
~~4.4.9~~ 4.4.8.10		AW	**COMMENT:** **Typo in example** **SUGGESTED CHANGE TO DOCUMENT:** **(TRU-UAL73-NTAA-KLAX-CFL/F280 OTD/W20R)** **(TRU0TRU-QFA43-YSSY-NZAA-HDG/115** **CFL/F270)**		Text revised as suggested.	R

Paragraph reference	Comment Number	Comment Author	Description of comment and proposed resolution	Cat	Resolution History	Status
4.5.2.2 (Example)		AW	**COMMENT:** **Correction to Departure aerodrome (error in original document)** **SUGGESTED CHANGE TO DOCUMENT:** **"(i) (AOC-TAP451/A2217-NFFNNFFF-PHNL)"**		Text revised as suggested.	R
4.6.1.1.1		AW	**COMMENT:** **Typo.** **SUGGESTED CHANGE TO DOCUMENT:** **"…Normally the information would be presented presended directly to the controller responsible…"**		Text revised as suggested.	R
4.6.1.2		AW	**COMMENT:** **Add "or functional address" to "Aircraft identification" (Field 7)** **SUGGESTED CHANGE TO DOCUMENT:**		Text revised as suggested.	R
4.6.2.1.1		AW	**COMMENT:** **Typo** **SUGGESTED CHANGE TO DOCUMENT:** **"Used to transmit operational information which cannot be formatted to comply with any and other message type…"**		Text revised as suggested.	R

Paragraph reference	Comment Number	Comment Author	Description of comment and proposed resolution	Cat	Resolution History	Status
4.6.3.2		AW	**COMMENT:** **The entire layout of the TDM (and the NAT message for that matter) could probably be vastly improved. However before any work is considered on that topic, I question whether these messages actually belong in this (AIDC) document – does anyone actually use these messages as AIDC messages (i.e. with a Header), or are they transmitted in a similar fashion as (say) a FPL message?** **If the latter, I suggest that they are either deleted in toto, or moved into an appendix in this document.** **If it is decided to keep them "as is", there are a number of errors in both the TDM and NAT descriptions and examples that need to be corrected** **SUGGESTED CHANGE TO DOCUMENT:**			O
4.7.1.1.1		AW	**COMMENT:** **Typo** **SUGGESTED CHANGE TO DOCUMENT:** **"Sent for each message (except for another LAM or LRM) that has been bee received, processed…"**		Text revised as suggested.	R
4.7.2.1.1		AW	**COMMENT:** **Reference needs to be updated** **SUGGESTED CHANGE TO DOCUMENT:** **"…which is defined in Chapter 3 Part II of this document…"**		Text revised as suggested.	R

Paragraph reference	Comment Number	Comment Author	Description of comment and proposed resolution	Cat	Resolution History	Status
4.7.2.4		AW	**COMMENT:** **Typos** **SUGGESTED CHANGE TO DOCUMENT:** **"The following format is used in n the RMK/ RM/ sub-field of the LRM to report errors"**		Text revised as suggested.	R
4.7.2.6		AW	**COMMENT:** **Typos** **SUGGESTED CHANGE TO DOCUMENT:** **"…Where no field number is referenced in Table 5-1, Error Codes, and the field number sub-field will be empty…"** **"…Note: Some ATSUs may not support non-numeric field numbers (e.g. "HEADER"). Whilst this is acceptable in order to preserve backwards compatibility with existing systems, the preferred implementation is for any non-numeric field numbers from for Table 5-1 to be supported within the LRM"**		Text revised as suggested.	R
4.7.2.7 Note		AW	**COMMENT:** **Typos** **Also suggest that the repeated inclusion of the text "Error codes" is redundant** **SUGGESTED CHANGE TO DOCUMENT:** **"Note: Some ATSUs may not include the error text from Table 5-1, Error Codes, in the <invalid text> field of transmitted LRMs. Whilst this is acceptable in order to preserve backwards compatibility with existing systems, the preferred option is for the LRM <invalid text> field to at least contain the error text from Table 5-1, Error Codes."**		Text revised as suggested.	R

Paragraph reference	Comment Number	Comment Author	Description of comment and proposed resolution	Cat	Resolution History	Status
~~4.7.2.8~~ 4.7.2.9		AW	**COMMENT:** **Critical errors in examples** **References need to be updated** **SUGGESTED CHANGE TO DOCUMENT:** **"(LRM-RMK/1/HEADER/INVALID SENDING UNIT)** **OR** **(LRM-RMK/1//INVALID SENDING UNIT)** **(See Note following paragraph 4.7.2.6 2.7.2.6)** **(LRM-RMK/17/16/INVALID AERODROME DESIGNATOR)** **OR** **(LRM-RMK/17/16)** **(See Note following paragraph 4.7.2.7 2.7.2.7** **(LRM-RMK/57//INVALID MESSAGE LENGTH)** **(LRM-RMK/27/15/INVALID LAT/LON 130S165E)** **The actual error "130S165E" may be optionally appended to the error text from Table 5-1, Error Codes"**		Text revised as suggested.	R
4.7.3.1.1		AW	**COMMENT:** **Suggested minor reword** **SUGGESTED CHANGE TO DOCUMENT:** **"…It is transmitted when no other AIDC application messages have received from the adjacent centre within an adaptable time…"**		Text revised as suggested.	R

Paragraph reference	Comment Number	Comment Author	Description of comment and proposed resolution	Cat	Resolution History	Status
4.7.4.1.1		AW	**COMMENT:** **Typo** **SUGGESTED CHANGE TO DOCUMENT:** **"Transmitted by one ATSU on ATSAU…"**		Text revised as suggested.	R
~~4.7.4.4~~ 4.7.4..4.1		AW	**COMMENT:** **Typos** **SUGGESTED CHANGE TO DOCUMENT:** **"…This field contains a number of f elements which are separated by a "/" character…."**		Text revised as suggested.	R
~~4.7.4.5~~ 4.7.4.4.2		AW	**COMMENT:** **Typos** **SUGGESTED CHANGE TO DOCUMENT:** **"…If data is not available for an optional element, that element is not to be included in the FAN message."**		Text revised as suggested.	R
~~4.7.4.7.2~~ 4.7.4.5.2		AW	**COMMENT:** **Typos** **SUGGESTED CHANGE TO DOCUMENT:** **"…Examples of SMIs Example or SMI include "FML", "FMR", "FMD", FM3" and "AFD""**		Text revised as suggested.	R
~~4.7.4.12.1~~ 4.7.4.10.1		AW	**COMMENT:** **Typos** **SUGGESTED CHANGE TO DOCUMENT:** **"…Occurrences of this element are preceded receded by the identifier 'FCO' which describes the ATS data link application(s) available in the avionics, as they were received in a logon or a previously received FAN**		Text revised as suggested.	R

Paragraph reference	Comment Number	Comment Author	Description of comment and proposed resolution	Cat	Resolution History	Status
			message. The FAN Fan message must include at least one ATS data link application – a separate identifier is used for each available application…"			
~~4.7.4.12.2~~ 4.7.4.10.2		AW	**COMMENT:** **Typo** **SUGGESTED CHANGE TO DOCUMENT:** **"The values associated with the FCO identifier consist of three…"**		Text revised as follows: "The value associated with FCO identifier consists of three letters…	R
~~4.7.4.12.3~~ 4.7.4.10.3		AW	**COMMENT:** **Typos + suggested minor reword** **SUGGESTED CHANGE TO DOCUMENT:** **"The second example illustrates a FAN message with the ADS-C ADS application only. This may be either because the aircraft is not CPDLC equipped, or because the FAN is being transmitted to used with an adjacent ATSU to enable monitoring using ADS-C by that ATSU when with the aircraft is only entering the Area of Common Interest (ACI) ACI.** **Example** **(FAN-QFA43-YSSY-NZAA-SMI/AFD FMH/QFA43 REG/VH-OJA FPO/34S158E FCO/ATC01 FCO/ADS01)** **(FAN-ANZ123-NZAA-KLAX-SMI/FML FMH/ANZ123 REG/ZK-NJP FCO/ADS01)…"**		Text revised as suggested.	R
~~4.7.4.12.4~~ 4.7.4.10.4		AW	**COMMENT:** **Typo + minor reword** **SUGGESTED CHANGE TO DOCUMENT:** **"ATSUs should ensure that at least two of the ACID,**		Text revised as suggested.	R

<table>
<tr><th>Paragraph reference</th><th>Comment Number</th><th>Comment Author</th><th>Description of comment and proposed resolution</th><th>Cat</th><th>Resolution History</th><th>Status</th></tr>
<tr><td></td><td></td><td></td><td>REG, or CODE elements fields are used to ensure that the logon information contained in the FAN message is associated with the correct flight data date record…”</td><td></td><td></td><td></td></tr>
<tr><td>4.7.5.1.1</td><td></td><td>AW</td><td>COMMENT:
Typo
SUGGESTED CHANGE TO DOCUMENT:
“…when their CPDLC CPDL C Connection with the aircraft is terminated…”</td><td></td><td>Text revised as suggested.</td><td>R</td></tr>
<tr><td>Table 4-2</td><td></td><td>AW</td><td>COMMENT:
Row 2 is missing from this Table.
Few typos

SUGGESTED CHANGE TO DOCUMENT:
<table>
<tr><th colspan="2">CPDLC Connection Status</th><th rowspan="2">Meaning</th></tr>
<tr><th>FCN sent by transferring ATSU</th><th>FCN sent by receiving ATSU</th></tr>
<tr><td>0</td><td></td><td>The CPDLC Connection with the aircraft has been ~~bee~~ terminated</td></tr>
<tr><td></td><td>0</td><td>No CPDLC Connection could be established with the aircraft</td></tr>
<tr><td></td><td>1</td><td>The CPDLC ~~CPDL C~~ Connection Request failed due to the receiving ATSU not being the nominated CPDLC Next Data Authority</td></tr>
<tr><td></td><td>2</td><td>A CPDLC ~~CPDL C~~ Connection has been established with the aircraft</td></tr>
</table></td><td></td><td>Text revised as suggested.</td><td>R</td></tr>
</table>

Paragraph reference	Comment Number	Comment Author	Description of comment and proposed resolution	Cat	Resolution History	Status
4.7.5.7.1		AW	**COMMENT:** **Typos** **SUGGESTED CHANGE TO DOCUMENT:** **"This optional element is preceded by the identifier "FREQ" and may be included in an inan FCN message transmitted by the receiving ATSU to advise of any changes to a previously notified (or a default) frequency. The FREQ/ identifier provides provide advice to the transferring ATSU…"**		Text revised as suggested.	R
4.7.5.7.2 (Examples)		AW	**COMMENT:** **Typos** **SUGGESTED CHANGE TO DOCUMENT:** **"…(FCN-ANZ15-KLAX-NZAA-CPD/2 FREQ/13261)** **The CPDLC Connection request for ANZ15 was successful. ContactContac/Monitor voice frequency is 13261** **FCN transmitted by transferring ATSU:** **(FCN-QFA43-YSSY-NZAA-CPD/0)** **The CPDLC Connection with was QFA43 has been terminated transmitted"**		Text revised as suggested, except: This example: **(FCN-QFA43-YSSY-NZAA-CPD/0)** **The CPDLC Connection with was QFA43 has been terminated transmitted"** Was replaced with an example from NAT ICD: **FCN transmitted by transferring ATSU:** **(FCN-ICE615-BIKF-KJFK-CPD/0)** ***The CPDLC connection with ICE615 has been terminated.***	R
4.8.1.3.2		AW	**COMMENT:** **Remove paragraph break between "will be sent" and "To the receiving ATSU"** **Suggested minor reword** **SUGGESTED CHANGE TO DOCUMENT:** **"The ADS-C data field may also be used…"** **"…The trigger would be by the bilateral agreement…"**		Text revised as suggested.	R

Paragraph reference	Comment Number	Comment Author	Description of comment and proposed resolution	Cat	Resolution History	Status
~~4.8.1.3.4~~ 4.8.1.3.3 (Example)		AW	**COMMENT:** **Typos** **SUGGESTED CHANGE TO DOCUMENT:** **"…(ADS-ANZ90-RJAA-NZAA-ADS/.ZK-OKC030007FF946B6F6DC8FC044B9D0DFC013B80DA88 FC0A64F9E4438B4AC8FC000E34D0EDC00010140F3E86)…"**		Text revised as suggested.	R
Table 4-4		AW	**COMMENT:** **Typo** **Suggest that the row containing NAT is moved underneath the row containing TDM.. NAT also needs a check mark in column 2** **SUGGESTED CHANGE TO DOCUMENT:** **Replace "Coordination" (Row 8) with "Coordination Negotiation"**		Text revised as suggested. Row moved as suggested.	R
Table 5-1		AW	**COMMENT:** **Typos** **Error 14** **Replace "TURBELENCE" with "TURBULENCE"** **Error 21** **Replace the text "Error" with "21"** **Error 28** **Replace "NAVID" with "NAVAID"** **Error 49** **Replace the text "Error" with "49"** **Replace "INVALIDE" with "INVALID"** **Error 51, 54** **Replace "Note 1" with "para 5.12" (I really think these**		Text revised as suggested.	R

Paragraph reference	Comment Number	Comment Author	Description of comment and proposed resolution	Cat	Resolution History	Status
			should remain as Notes) **Error 56** **Add text "Use appropriate error"** **Error 59** **Add text (See para 5.12) (also see comment to Error 51)** **Errors 60-71** **Missing** **Errors 72-91 – Replace Note with appropriate paragraph reference (which I feel should remain as a Note)** **Error 90** **Replace "LEVE" with "LEVEL"** **Errors 87-91** **Add <space> between "/" and following text (i.e. "HDG/ IDENTIFIER", rather than "HDG/IDENTIFIER"** **Errors 92-256** **Delete reference to fields 14, 15** **SUGGESTED CHANGE TO DOCUMENT:**			
~~5.12~~ Table 5-1 Note 2		AW	**COMMENT:** **Typo** **SUGGESTED CHANGE TO DOCUMENT:** **"…is replaced by the applicable value when win this information is available"**		Text revised as suggested.	R

Paragraph reference	Comment Number	Comment Author	Description of comment and proposed resolution	Cat	Resolution History	Status
Table 6-1		AW	**COMMENT:** **Title of table will need to be corrected** **SUGGESTED CHANGE TO DOCUMENT:**		Title changed to: "Proposed ATM Application Naming Convention"	R
7.13		AW	**COMMENT:** **Typo** **SUGGESTED CHANGE TO DOCUMENT:** **"Although outside the scope of the ICD, Flight flight Planning messages…"**		Text revised as suggested.	R
7.21.1.1		AW	**COMMENT:** **Given the proposed global nature of this document, suggest deleting this paragraph** **SUGGESTED CHANGE TO DOCUMENT:**			O
7.21.1.3		AW	**COMMENT:** **Typo** **SUGGESTED CHANGE TO DOCUMENT:** **"It must be possible to revert to ot manual intervention…"**		Text revised as suggested.	R
7.22.1		AW	**COMMENT:** **Update references** **SUGGESTED CHANGE TO DOCUMENT:**		Text revised as suggested.	R
7.23.1.1		AW	**COMMENT:** **Correction to error in original document ("LRM message")** **Also, I feel that 'an LRM" is more correct than "a LRM"**		Text revised as suggested.	R

Paragraph reference	Comment Number	Comment Author	Description of comment and proposed resolution	Cat	Resolution History	Status
			SUGGESTED CHANGE TO DOCUMENT: **"…. While no LAM is generated for a valid LRM, an ATSU may choose to respond to an invalid LRM with an a LRM. Such a response is termed an Application Response, and is generated automatically by the automation system. A LAM shall be transmitted when the receiving automation system found the received message to be syntactically correct and the message data was accepted for further processing or presentation. Otherwise, an a LRM message shall be transmitted"**			
7.23.1.2		AW	**COMMENT:** **Update reference** **SUGGESTED CHANGE TO DOCUMENT:**		Text revised as suggested.	R
7.23.1.4		AW	**COMMENT:** **Typo** **SUGGESTED CHANGE TO DOCUMENT:** **"…and a communications process which is responsible for the reliable delivery deliver of data, but not data interpretation…"**		Text revised as suggested.	R
7.23.1.5		AW	**COMMENT:** **I feel that 'an LRM" is more correct than "a LRM"** **SUGGESTED CHANGE TO DOCUMENT:** **"Receipt of an a LRM shall cause…"**		Text revised as suggested.	R
Table 7-1		AW	**COMMENT:** **Heading missing from column 2 of table "Required Operational Response"** **SUGGESTED CHANGE TO DOCUMENT:**		Heading added.	R

Paragraph reference	Comment Number	Comment Author	Description of comment and proposed resolution	Cat	Resolution History	Status
7.23.2.2		AW	**COMMENT:** **I feel that 'an REJ" is more correct than "a REJ"** **SUGGESTED CHANGE TO DOCUMENT:** **"An A REJ is not available…"**		Text revised as suggested.	R
7.23.2.5		AW	**COMMENT:** **Need to discuss whether this is how ATSUs actually do this currently, and if it is the most appropriate method** **Personally I would have thought that linking the messages, one by one (in a similar way to CPDLC dialogues would be more appropriate)** **SUGGESTED CHANGE TO DOCUMENT:**			O
7.24.1		AW	**COMMENT:** **Suggested minor reword** **SUGGESTED CHANGE TO DOCUMENT:** **"The ASM message is used to confirm that the ATC application of the receiving ATSU on the other end is on-line…"**		Text revised as suggested.	R
~~7.24.2.1~~ 7.24.4		AW	**COMMENT:** **Few typos, updated reference & minor rewords** **SUGGESTED CHANGE TO DOCUMENT:** **"…However, when an a FCN is received with a communication status field value of (1) indicating the**		Text revised as suggested.	R

Paragraph reference	Comment Number	Comment Author	Description of comment and proposed resolution	Cat	Resolution History	Status
			receiving ATSU is not the Next Data Authority the transferring ATSU should send another NDA message to the aircraft and another FAN message to the receiving ATSU to indicate that the NDA message has been sent (refer to Figure 7-4 D-4). While the second FAN may not be ve required for address forwarding purposes it does provide the receiving ATSU with a positive indication that another NDA message has been sent to the aircraft"			
~~7.24.2.2~~ 7.24.5		AW	**COMMENT:** **Typo** **SUGGESTED CHANGE TO DOCUMENT:** **"…for data link transfers in the event of failure of or the ground-ground link"**		Text revised as suggested.	R
~~7.24.2.3~~ 7.24.6		AW	**COMMENT:** **Updated reference to FOM** **SUGGESTED CHANGE TO DOCUMENT:** **"…This parameter should be in accordance with guidance outlined in the Global Operational Data Link Document (GOLD) FANS Operations Manual (FOM)…."**		Text revised as suggested.	R
~~7.24.2.4.1~~ 7.24.7		AW	**COMMENT:** **Suggest that this paragraph is returned to its previous "Note" status** **SUGGESTED CHANGE TO DOCUMENT:**		Para amended as suggested to "Note"..	R
~~7.24.2.5~~ 7.24.7.1		AW	**COMMENT:** **Typos** **- There should be 2 <spaces> between the hyphen and**		Text revised as suggested.	R

Paragraph reference	Comment Number	Comment Author	Description of comment and proposed resolution	Cat	Resolution History	Status
			"AFN" **- There should be only one comma between "FCOATC" and "01292B"** **- There should be no <space> between the period and "VH-EBA"** **- There should be no <space> between the two <commas> and "001902"** **SUGGESTED CHANGE TO DOCUMENT:** **"…In the example below, the aircraft identification is QFA924 rather that the QF0924QFA924 contained in Line 4 of the ACARS message.** **QU BNECAYA** **.QXSXMXS 010019** **AFD** **FI QF0924/AN VH-EBA** **DT QXT POR1 010019 J59A** **- AFN/FMHQFA924, . VH-EBA,,** **001902/FPOS33373E150484,0/FCOADS,** **01/FCOATC,,01292B"**			
~~7.24.2.6~~ 7.24.8		AW	**COMMENT:** **Typo** **Suggested additional text** **SUGGESTED CHANGE TO DOCUMENT:** **"…it is possible for the SMI of or an aircraft to change…"** **"…To ensure that the next ATSU has up to date information, the SMI transmitted in any FAN message should be the SMI from the most recently received logon or FAN message. If a logon is received containing a new SMI after a FAN message has been transmitted to the next ATSU, a new FAN message containing the updated information shall be transmitted."**		This proposed text: **If a logon is received containing a new SMI after a FAN message has been transmitted to the next ATSU, a new FAN message containing the updated information shall be transmitted."** is not contained in the APAC ICD, *APPENDIX D, PARA 2.4.7* or NAT ICD *APPENDIX C, PARA 5.1.11*	O

Paragraph reference	Comment Number	Comment Author	Description of comment and proposed resolution	Cat	Resolution History	Status
~~7.24.2.7~~ 7.24.9		AW	**COMMENT:** **Typos.** **Suggested minor reword** **SUGGESTED CHANGE TO DOCUMENT:** **"A hyphen within with the registration that was a contained in either the logon or any previously received FAN message must also be included in the REG element of any transmitted FAN message. Without this hyphen, data link message transmitted by the next ATSU may not be delivered to the aircraft."**		Text revised as suggested.	R
7.24.2.7.1		AW	**COMMENT:** **Suggest that this paragraph is returned to its previous "Note" status** **SUGGESTED CHANGE TO DOCUMENT:**		Para amended as suggest to "Note"	R
~~7.24.2.10~~ 7.24.11		AW	**COMMENT:** **Typos** **SUGGESTED CHANGE TO DOCUMENT:** **"…that the receiving ATSU has established an a (inactive) CPDLC connection with an aircraft…"** **"…a CPDLC Connection by the their receiving ATSU. FCN messages should only be transmitted when a CPDLC transfer is being effected affected – i.e. not for transfers involving aircraft…"**		Text revised as suggested.	R
Table 7-2		AW	**COMMENT:** **Rather critical typo in heading for column 2 – should read "When an FCN should not be sent"** **Missing text in Row 2 column 2: "On receipt of a Disconnect Request terminating the CPDLC connection"**		Text revised as suggested.	R

Paragraph reference	Comment Number	Comment Author	Description of comment and proposed resolution	Cat	Resolution History	Status
			In Row 4 column 2, replace "#" with "DM" **Typo in last row of table – replace "CPDL C" with "CPDLC"** **SUGGESTED CHANGE TO DOCUMENT:**			
Figure 7-1 to 7-4		AW	**COMMENT:** **A number of corrections required to diagrams. New versions (using similar format to GOLD) embedded below.** **SUGGESTED CHANGE TO DOCUMENT:** C:\Fig 7-1.png C:\Fig 7-2.png C:\Fig 7-3.png C:\Fig 7-4.png		Diagrams updated as suggested.	R
~~7.24.3.2~~ 7.24.14.2		AW	**COMMENT:** **Typo + minor reword**		Text revised as suggested.	R

Paragraph reference	Comment Number	Comment Author	Description of comment and proposed resolution	Cat	Resolution History	Status
			SUGGESTED CHANGE TO DOCUMENT: **"Figure 7-1 shows a routine CPDLC data link transfer from one ATSU to the next. The first step in the transfer process is the uplinking up linking of a…"**			
Fig 7-2 Title		AW	**COMMENT:** **Title of figure should read "CPDLC Transfer using FAN and FCN messaging – initial Connection Request failed"** **SUGGESTED CHANGE TO DOCUMENT:**		Text revised as suggested.	R
~~7.24.3.3~~ 7.24.14.3		AW	**COMMENT:** **Minor reword** **SUGGESTED CHANGE TO DOCUMENT:** **"Figure 7-2 shows a CPDLC data link transfer where there is no…"**		Text revised as suggested.	R
~~7.24.3.4~~ 7.24.14.4		AW	**COMMENT:** **Typos + minor reword** **SUGGESTED CHANGE TO DOCUMENT:** **"Figure 7-3 shows an attempted CPDLC data link transfer where there is no response by the avionics to multiple CPDLC connection request requests uplinked by the receiving ATSU before the 'time out' VSP prior to the FIR boundary. An unsuccessful FCN (CPD=0) is transmitted to the transferring ATSU. Letters of Agreement should describe the procedures to be followed in the event even that the receiving ATSU…"**		Text revised as suggested.	R
~~7.24.3.5~~ 7.24.14.5		AW	**COMMENT:** **Minor reword** **SUGGESTED CHANGE TO DOCUMENT:**		Text revised as suggested.	R

Paragraph reference	Comment Number	Comment Author	Description of comment and proposed resolution	Cat	Resolution History	Status
			"Figure 7-4 shows a CPDLC data link transfer in which the original…"			
~~7.32.2~~ 7.32.2.1		AW	**COMMENT:** **Typo** **SUGGESTED CHANGE TO DOCUMENT:** **"…The sending ATSU is responsible for determining which D-ATSUs must be notified"**		Text revised as suggested.	R
7.32.5.1, 7.32.5.3, 7.32.5.5		AW	**COMMENT:** **Suggest that items are bulleted** **SUGGESTED CHANGE TO DOCUMENT:**		Text not bulleted as suggested. Bullets are not used throughout the document.	R
~~7.32.5.5~~ 7.32.5.6		AW	**COMMENT:** **Typo – remove <space> in latlong example between "ddmm" and "[NS]"** **SUGGESTED CHANGE TO DOCUMENT:** **"…Latitude/Longitude in the format dd[NS]ddd[EW] or ddmm [NS]dddmm[EW]…"**		Text revised as suggested.	R
~~7.32.6~~ 7.32.6.1		AW	**COMMENT:** **Typo** **SUGGESTED CHANGE TO DOCUMENT:** **"…A notification can be cancelled using a MAC message…"**		Text revised as suggested.	R
7.33.1		AW	**COMMENT:** **Typos** **SUGGESTED CHANGE TO DOCUMENT:** **"…as documented within bi-lateral agreements agreement, or it can also be manually initiated. There are several types of coordination dialogues which may occur, depending on where the aircraft is…"**		Text revised in accordance with APAC ICD *APPENDIX D, PARA 3.2.1* **"as documented within a bi-lateral agreement, or…"**	
~~7.33.3~~ 7.33.3.1		AW	**COMMENT:** **Typo** **SUGGESTED CHANGE TO DOCUMENT:**		Text revised as suggested.	R

Paragraph reference	Comment Number	Comment Author	Description of comment and proposed resolution	Cat	Resolution History	Status
			"…is available at the R-ATSU (e.g., from form either an ABI or FPL message…"			
~~7.33.3.1~~ 7.33.3.2		AW	**COMMENT:** **Typo** **SUGGESTED CHANGE TO DOCUMENT:** **"…Pac PAC signals to the R-ATSU…"**		Text revised as suggested.	R
~~7.33.4~~ 7.33.4.1		AW	**COMMENT:** **Typo** **SUGGESTED CHANGE TO DOCUMENT:** **"…(1) with an ACP, indicating indication that the coordination proposal…"**		Text revised as suggested.	R
~~7.33.5~~ 7.33.5.1		AW	**COMMENT:** **Typo** **SUGGESTED CHANGE TO DOCUMENT:** **"Active CDN. For a given flight, only one CDN on DCN may be active between any pair of ATSUs. Note, however that coordination between more than two ATSUs (for the same flight) may have a total number of active CDNs greater than one, though thought each pair of ATSUs is still restricted to a maximum of one active CDN per flight. In the exceptional (rare) case where a C-ATSU and D-ATSU both simultaneously transmit CDNs, the C-ATSU shall transmit a REJ to the D-ATSU cancelling the D-ATSU's S-ATSU's CDN"**		Text revised as suggested.	R
~~7.33.6.1.2~~ 7.33.6.4		AW	**COMMENT:** **Suggest points are bulleted** **Typos in format of latlong** **SUGGESTED CHANGE TO DOCUMENT:** **"…Latitude/longitude in the format dd[NS]ddd[EW]{EW] or ddmm[NS]dddmm[EW]; or …"**		Text not bulleted as suggested. Bullets are not used throughout the document. Text revised as suggested.	R

Paragraph reference	Comment Number	Comment Author	Description of comment and proposed resolution	Cat	Resolution History	Status
~~7.33.6.1.4~~ 7.33.6.5.1		AW	**COMMENT:** **Typo** **SUGGESTED CHANGE TO DOCUMENT:** **"…ATSus ATSUs should consider…"**		Text revised as suggested.	R
~~7.33.8.1~~ 7.33.8.2		AW	**COMMENT:** **Typos** **SUGGESTED CHANGE TO DOCUMENT:** **"Whilst a number of the elements element that may be coordinated by a TRU message may be more suited…"**		Text revised as suggested.	R
~~7.33.8.3~~ 7.33.8.4		AW	**COMMENT:** **Typo** **SUGGESTED CHANGE TO DOCUMENT:** **"When using the DCT/[position]DEC/[position] element…"**		Text revised as suggested.	R
~~7.33.8.4~~ 7.33.8.5		AW	**COMMENT:** **Typos** **Suggest points are bulleted** **SUGGESTED CHANGE TO DOCUMENT:** **"For the purpose of the TRU message, the format of [position] is one of the following:** **From 2 to 5 characters being the coded designator assigned to an en-route point or aerodrome; or** **ddmm[NS]dddmm[EW]; or** **dd[NS]ddd[EW]; or** **2 or 3 characters being the coded identification of a navigation aid followed by 3 decimal numerics giving the bearing from the point in degrees magnetic followed by a 3 decimal numerics giving the distance from the point in nautical miles"**		Text not bulleted as suggested. Bullets are not used throughout the document. Text revised as suggested.	R
~~7.33.10~~ 7.33.10.1		AW	**COMMENT:** **Typos** **SUGGESTED CHANGE TO DOCUMENT:** **"Coordination and the ACI. ATSU A may need to coordinate with or provide information to ATSU B on all aircraft that enter ACI B, even if they do not enter**		Text revised as suggested.	R

Paragraph reference	Comment Number	Comment Author	Description of comment and proposed resolution	Cat	Resolution History	Status
			FIR B. Consider the case of aircraft A in FIR A and aircraft B in FIR B, both flying near the FIR A – FIR B boundary, but never penetrating the other FIR's other's FIR airspace…."			
~~7.34.1~~ 7.34.1.1		AW	**COMMENT:** **Typos** **SUGGESTED CHANGE TO DOCUMENT:** **"This phase occurs when the C-ATSU is ready to relinquish control of the flight to the R-ATSU, normally just before the FIR boundary crossing. The C-ATSU transmits transfers a TOC message to the R-ATSU…"**		Text revised as suggested.	R
7.43.1		AW	**COMMENT:** **Minor reword** **SUGGESTED CHANGE TO DOCUMENT:** **"…Either ATSU can close the dialogue by transmitting issuing an ACP or REJ…"**		Text revised as suggested.	R
7.45.2		AW	**COMMENT:** **Minor reword** **SUGGESTED CHANGE TO DOCUMENT:** **"Several flight states are identified in the above description discussion…."**		Text revised as suggested.	R
Table 7-3		AW	**COMMENT:** **Row 4, column 2** **"Coordination data is being exchange exchanged between…"** **SUGGESTED CHANGE TO DOCUMENT:**		Text revised as suggested.	R
State transition diagram		AW	**COMMENT:** **There are a few omissions from this diagram. The original is probably available somewhere…** **SUGGESTED CHANGE TO DOCUMENT:**		Diagram from APAC ICD inserted.	R

Paragraph reference	Comment Number	Comment Author	Description of comment and proposed resolution	Cat	Resolution History	Status
Table 7-4		AW	**COMMENT:** **Row 8, column 1** **"Negotiating Notifying/Negotiating"** **Row 8, column 3 – minor reword** **"If the downstream ATSU ATSu does not like cannot accept the current clearance…"** **Row 9, column 3** **"…conditions using an ACP"** **Row 10, column 1** **"CoordinatingNegotiating/Coordinated"** **Row 12, column 3 – minor reword** **"Either ATSU may propose changes to attempt to change the previously agreed…"** **The Table appears to be split after row 14** **Row 15, column 3** **"A TOC is sent after coordination occurs but bur (usually just)…"** **Last row, column 3** **"Similar to a Re-Negotiation/Coordinated state transition transmission…."** **SUGGESTED CHANGE TO DOCUMENT:**		Text revised as suggested.	R
7.51		AW	**COMMENT:** **Typo** **SUGGESTED CHANGE TO DOCUMENT:** **"…and showed how the aircraft transitions from one form on state to the next…"**		Text revised as suggested.	R

Paragraph reference	Comment Number	Comment Author	Description of comment and proposed resolution	Cat	Resolution History	Status
Table 7-6		AW	**COMMENT:** **Row 9, column 1 (with "ACP" in column 2) "Coordinating Coordinated"** **4th last row, column 1 (with "CDN in column 2) "Transferred Transferring"** **SUGGESTED CHANGE TO DOCUMENT:**		Text revised as suggested.	R
~~7.62.2~~ 7.62		AW	**COMMENT:** **Typo** **Is it worth adding info about the NAT message here?** **SUGGESTED CHANGE TO DOCUMENT:** **"…The TDM TD is generated…"**			O
7.63.2		AW	**COMMENT:** **Typo** **SUGGESTED CHANGE TO DOCUMENT:** **"…contains a text field – the ADS-C data field – which contains information…"**		Text revised as suggested.	R
7.63.3		AW	**COMMENT:** **A few extra characters have been added to the ADS-C report and ADS-C data field** **SUGGESTED CHANGE TO DOCUMENT:**		Text revised as suggested.	R

Paragraph reference	Comment Number	Comment Author	Description of comment and proposed resolution	Cat	Resolution History	Status
			QU BNECAYA .QXSXMXS 011505 PAR FI NZ0090/AN ZK-OKC DT QXT POR1 011505 F59A - ADS.ZK-OKC030000~~0~~7FF946B6F6DC8FC044B9D0DFC013B80DA88F COA64F9E4438B4AC8FC000E34~~we~~D0EDC00010140F3E8660F3 ADS/.ZK-OKC030000~~0~~7FF946B6F6DC8FC044B9D0DFC013B80DA88FC0A64F9E4438B4AC8FC000E34D0EDC00010140F3E86			
7.63.5		AW	**COMMENT:** **This is a duplicate of 7.63.4** **SUGGESTED CHANGE TO DOCUMENT:**		Duplicate text deleted.	R
~~7.63.5.2~~ 7.63.4.2		AW	**COMMENT:** **Typo** **SUGGESTED CHANGE TO DOCUMENT:** **"…this data may also be transferred using the ACARS ground-ground network…"**		Text revised as suggested.	R
~~7.71.2~~ 7.72.2		AW	**COMMENT:** **Typo** **SUGGESTED CHANGE TO DOCUMENT:** **"…) is transmitted by Brisbane thirty minutes prior to the boundary estimate estimated (which is now 1213)…"**		Text revised as suggested.	R

Paragraph reference	Comment Number	Comment Author	Description of comment and proposed resolution	Cat	Resolution History	Status
~~7.71.4~~ 7.72.4		AW	**COMMENT:** **Minor reword** **SUGGESTED CHANGE TO DOCUMENT:** **"…is defined in bilateral agreements between the two ATS units."**		Text revised as suggested.	R
~~7.72.1~~ 7.73.1		AW	**COMMENT:** **Typo** **SUGGESTED CHANGE TO DOCUMENT:** **"Santa Maria transmits a notification message (ABI) to New York Auckland…"**		Text revised as follows: "Brisbane transmits a notification message (ABI) to Auckland…	R
7.72.5, 7.73.5, 7.74.4, 7.75.5, 7.76.5, 7.77.5, 7.78.7		AW	**COMMENT:** **Minor reword** **SUGGESTED CHANGE TO DOCUMENT:** **"…messages is defined in bilateral agreements between the two ATS units."**		Text revised as suggested.	R
~~7.73.2~~ 7.74.2		AW	**COMMENT:** **Typo** **SUGGESTED CHANGE TO DOCUMENT:** **"The coordination message (CPL) is transmitted by to Brisbane…"**		Text revised as suggested.	R
~~7.74.1~~ 7.75.1		AW	**COMMENT:** **typos** **SUGGESTED CHANGE TO DOCUMENT:** **"…by Bali transmitting a coordination message (PAC). This message alerts Brisbane that the flight is pending and indicates a boundary estimate of 1213 at F290 f290…."**		Text revised as suggested.	R
~~7.74.3~~ 7.75.3		AW	**COMMENT:** **Typo** **SUGGESTED CHANGE TO DOCUMENT:** **"Bali transfer transfers ATC responsibility…"**		Text revised as suggested.	R

Paragraph reference	Comment Number	Comment Author	Description of comment and proposed resolution	Cat	Resolution History	Status
Example 4 (Table)		AW	**COMMENT:** **Typo** **SUGGESTED CHANGE TO DOCUMENT:** **(TOC-AAA842/A4534-WRRR-YPPH)-14/OGAMI/1219F290)**		Text revised as suggested.	R
~~7.75.4~~ 7.76.4		AW	**COMMENT:** **Typo** **SUGGESTED CHANGE TO DOCUMENT:** **"Due to tow weather QFA11…"**		Text revised as suggested.	R
Example 5 (Table)		AW	**COMMENT:** **Incorrect table has been inserted** **SUGGESTED CHANGE TO DOCUMENT:**		Example revised.	R
~~7.76.3~~ 7.77.3		AW	**COMMENT:** **Typo** **SUGGESTED CHANGE TO DOCUMENT:** **"…requires that prior coordination is completed required before issuing a change…"**		Text revised as suggested.	R
Example 6 (Table)		AW	**COMMENT:** **Typo** **SUGGESTED CHANGE TO DOCUMENT:** **"(AOC ACO-QFA108-YBBN-NZCH)"**		Text revised as suggested.	R
Example 7 (Table)		AW	**COMMENT:** **Typos + errors in original document** **SUGGESTED CHANGE TO DOCUMENT:** **"(ABI-ANZ136 QFA108-YBBN-RUNOD/1400F350 -NZCH-8/IS-9/A320/M-10/SDHIWRJ -15/M078F350 M084F350 SCOTT Y32 LOKET L503 LALAP DCT...)…"** **(EST-ANZ136-YBBN-RUNOD33S163E/1401F350-NZCH)** **(ACP-ANZ136-YBBN-NZCHNZAA)**		Text revised as suggested.	R

Paragraph reference	Comment Number	Comment Author	Description of comment and proposed resolution	Cat	Resolution History	Status
~~7.78.7~~ 7.79.7		AW	**COMMENT:** **Typos** **SUGGESTED CHANGE TO DOCUMENT:** **"Brisbane terminates the CPDLC CPDL connection with UAL815 and transmits an a FCN to Auckland…"**		Text revised as suggested.	R
Example 8 (Table)		AW	**COMMENT:** **Typos + errors in original document** **SUGGESTED CHANGE TO DOCUMENT:** **(ABI-UAL815/-YSSY-3050S16300E3200S16300E/0330F290 -KLAX-8/IS-9/B744/H-10/SDHIRZYWJP/CD-15/N0499F310 NOBAR A579 JORDY DCT 3200S16000E 3050S16300E 2800S16500E…)** **(EST-UAL815-YSSY-3050S16300E33S163E/0330F290-KLAX)**		Text revised as suggested.	R
~~7.79.3~~ 7.80.3		AW	**COMMENT:** **Typo** **SUGGESTED CHANGE TO DOCUMENT:** **"…responsibility by responding with an AOCACP."**		Text revised as suggested.	R
Example 9		AW	**COMMENT:** **Error in original document** **SUGGESTED CHANGE TO DOCUMENT:** ***Melbourne~~Brisbane~~*** | ***Brisbane~~Auckland~~***		Text revised as suggested.	R
7.81		AW	**COMMENT:** **Given the global nature of the document this probably should be removed** **SUGGESTED CHANGE TO DOCUMENT:**			O

Paragraph reference	Comment Number	Comment Author	Description of comment and proposed resolution	Cat	Resolution History	Status
7.82		AW	**COMMENT:** **Suggest that this paragraph is moved (e.g. possibly to below 7.62.2?)** **SUGGESTED CHANGE TO DOCUMENT:**			O
Chapter 8		AW	**COMMENT:** **I can't comment on most of this as it appears to be NAT-specific. However:** **1. I suggest that a lot of this information is more relevant to letters of agreement rather than this document?** **2. There are a number of message types and acronyms in here that are not described within the document (TAM, RPT, CLR etc)** **SUGGESTED CHANGE TO DOCUMENT:**			O
Chapter 9 (Title)		AW	**COMMENT:** **Typo** **SUGGESTED CHANGE TO DOCUMENT:** **"Relationship to ICAO AIDC AIDS Messages"**		Text revised as suggested.	R
Chapter 11		AW	**COMMENT:** **I can't comment on most of this as it appears to be NAT-specific. However:** **1. Should messages such as DLA, DEP etc be included within this AIDC document?** **2. I am not familiar with the use of the DTSN – I assume that this is the correct format?** **SUGGESTED CHANGE TO DOCUMENT:**			O
11.23.1.2		AW	**COMMENT:** **Error in original document (I think – missing hyphen)** **Is Field 15 in this case only supposed to contain a single waypoint?** **SUGGESTED CHANGE TO DOCUMENT:**		Text revised as suggested.	O

Paragraph reference	Comment Number	Comment Author	Description of comment and proposed resolution	Cat	Resolution History	Status
			(ACTO/P487-BAW179-KJFK-ETIKI/0703F370 -EGLL-9/B743-15/QPR)			
Appendix A		AW	**COMMENT:** **Not reviewed** **SUGGESTED CHANGE TO DOCUMENT:**			
8.22.5.1		KC	**COMMENT:** **The paragraph reference from** *NAT ICD, ATTACHMENT 1, PARA 2.2.5.1*, **is unclear.** This will occur when the flight's route will now no longer traverse airspace as defined in paragraph ~~3.3.1~~ **SUGGESTED CHANGE TO DOCUMENT:**		Need to determine which para in the NAT ICD is referenced.	O
8.22.6.1		KC	**COMMENT:** **The paragraph reference from** *NAT ICD, ATTACHMENT 1, PARA 2.2.6.1*, **is unclear.** The "MIS" message will be used to transmit plain language statements or queries between the two centres. However, the MIS message will also be used for the transmission of NAT elapsed times incorporating the information in paragraph ~~3.2.5~~ . **SUGGESTED CHANGE TO DOCUMENT:**		Need to determine which para in the NAT ICD is referenced.	O
Document		KC	**COMMENT:** **All references in document refer to corresponding NAT or APAC ICD paras/chapters.** **SUGGESTED CHANGE TO DOCUMENT:**		All references updated to reflect PAN ICD paras/chapters	R

Message part		*Component of the message part*	*Elements of the component*	*Teletypewriter character*
THE HEADING	HEADING LINE (see 4.4.15.1.1)	Start-of-Heading Character	One Character (0/1)	SOH
		Transmission Identification	a) Transmitting-terminal letter b) Receiving-terminal letter c) Channel-identification letter d) Channel-sequence number (*Example*: NRA062)	-----
		(*If necessary*) Additional Service Indication	a) One SPACE b) No more than the remainder of the line (*Example*: 270930)	→
	ADDRESS (see 4.4.15.2.1)	Alignment Function	One CARRIAGE RETURN, one LINE FEED	↵
		Priority Indicator	The relevant 2-letter group	--
		Addressee Indicator(s)	One SPACE An 8-letter group given in sequence for each addressee (*Example*: EGLLZRZX→EGLLYKYX→EGLLACAD)	
		Alignment Function(s)	One CARRIAGE RETURN, one LINE FEED	↵
	ORIGIN (see 4.4.15.2.2)	Filing Time	6-digit date-time group specifying when the message was filed for transmission	-----
		Originator Indicator	a) One SPACE b) 8-letter group identifying the message originator	→—
		Priority Alarm (*used only in teletypewriter operation for Distress Messages*)	Five characters (0/7)(BEL)	
		Optional Heading Information	a) One SPACE b) Additional data not to exceed the remainder of the line. See 4.4.15.2.2.6.	
		Alignment Function	One CARRIAGE RETURN, one LINE FEED	↵
		Start-of-Text Character	One character (0/2)	STX
TEXT (see 4.4.15.3)		Beginning of the Text	Specific identification of Addressee(s) (*if necessary*) *with* each followed by one CARRIAGE RETURN, one LINE FEED (*if necessary*) The English word FROM (*if necessary*)(see 4.4.15.3.5) Specific identification of Originator (*if necessary*) The English word STOP followed by one CARRIAGE RETURN, one LINE FEED (*if necessary*) (see 4.4.15.3.5) *and/or* Originator's reference (*if used*)	
		Message Text	Message Text with one CARRIAGE RETURN, one LINE FEED at the end of each printed line of the Text except for the last one (see 4.4.15.3.6)	
		Confirmation (*if necessary*)	a) One CARRIAGE RETURN, one LINE FEED b) The abbreviation CFM followed by the portion of the Text being confirmed.	
		Correction (*if necessary*)	a) One CARRIAGE RETURN, one LINE FEED b) The abbreviation COR followed by the correction of an error made in the preceding Text	
ENDING (see 4.4.15.3.12.1)		Alignment Function	One CARRIAGE RETURN, one LINE FEED	↵
		Page-feed Sequence	One character (0/11)	VT
		End-of-Text character	One character (0/3)	ETX

Figure 4-4. Message format International Alphabet No. 5 (IA-5)
(the above illustrates the teletypewriter message format described in 4.4.15)

Table 1. Expected Message Rates and Sizes

Message	Avg. per Flight	Avg. Size[1]	Comments
Messages per near-border departure flight:			
FPL	1	240	
CHG	0.5	160	Assumed 1 of 2 flights amended after coordination, before departure.
EST	1	120	
MOD	0.5	120	Assumed 1 of 2 flights amended after coordination.
Messages per non near-border departure flight:			
CPL	1	250	
MOD	0.5	120	Assumed 1 of 2 flights amended after coordination.
Messages per every flight:			
CNL	0.01	100	Assumed 1 in 100 flight plans are cancelled.
RTI	1	150	
RTU	5	140	Assumed 1 RTU every 6 seconds for 30 seconds.
RTA	1	110	
MIS	0.1	130	
Responses (not per flight):			
LAM/RLA	Sum of all above <u>except</u> RTU	80	
LRM		100	

[1] The average message size includes an estimated 50 bytes of communications header added to each application message. Average message size estimates are based on a combination of specification analysis, and review of sample data. In particular the route, other information, and nav/comm equipment elements were estimated based on approximately 200 FPLs filed in Houston Center in 1998.

[1] The average message size includes an estimated 50 bytes of communications header added to each application message. Average message size estimates are based on a combination of specification analysis, and review of sample data. In particular the route, other information, and nav/comm equipment elements were estimated based on approximately 200 FPLs filed in Houston Center in 1998.